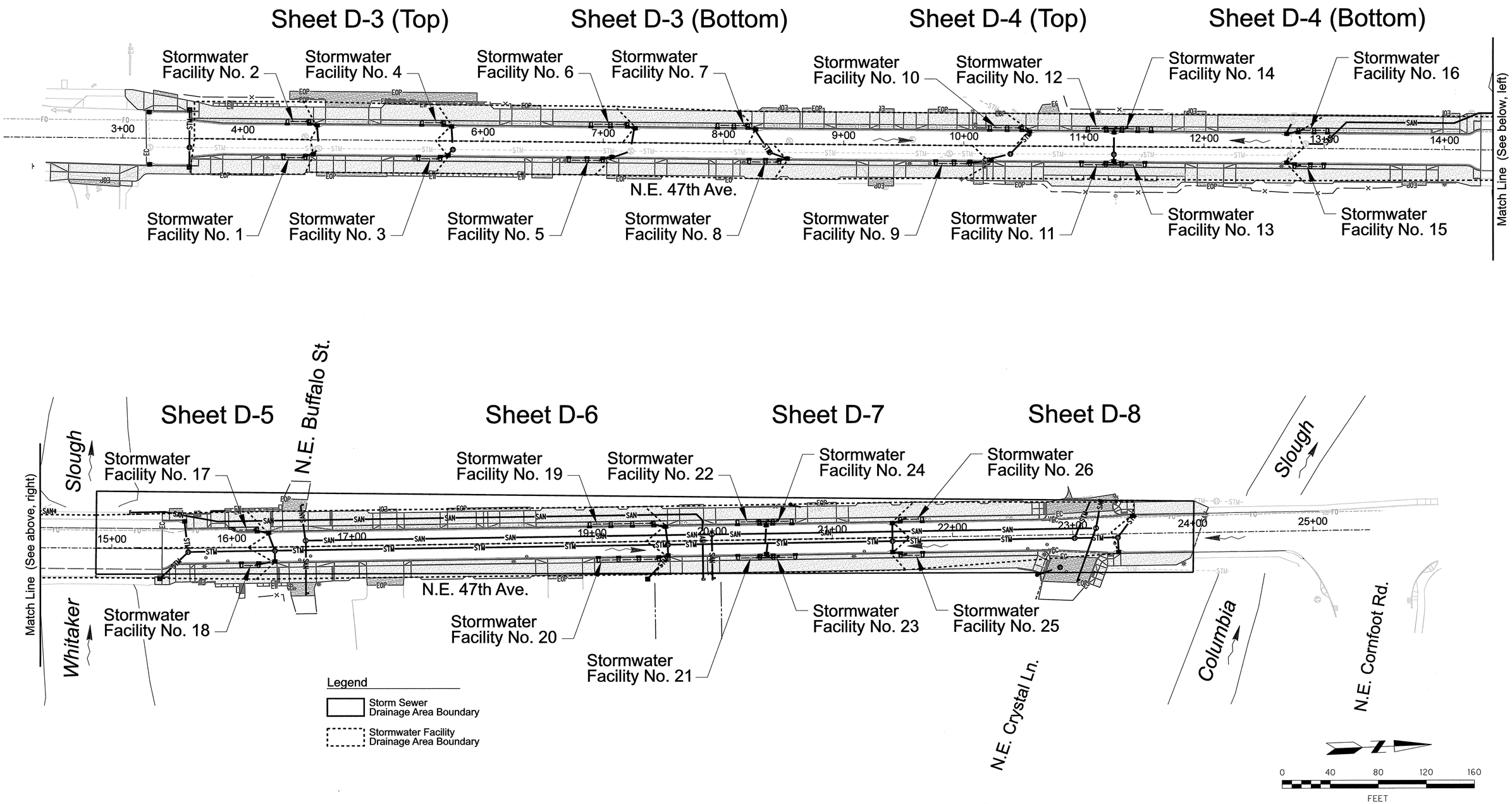

NO.	DATE	DESCRIPTION	APPD.

REVISION

DESIGNED BY R. Corti	DATE APPROVED April 2019
CAD BY C. Shearer	PROGRAM MGR. J. Dvorak
CHECKED BY D. Nunamaker	CONSTR. MGR. L. Moorhead
DESIGN MGR. M. Gualotunia	

REGISTERED PROFESSIONAL ENGINEER 77531 OREGON MARCH 14, 2006 MELANIE GUALOTUNIA
Melanie Gualotunia
Expires 6/30/19

APPROVAL:

William F. Ryan 5/15/19
CHIEF ENGINEER — REG. PROF. ENGR. NO. 16301PE

CITY OF PORTLAND, OREGON
BUREAU OF ENVIRONMENTAL SERVICES
NICK FISH — COMMISSIONER
WILLIAM F. RYAN, P.E. — CHIEF ENGINEER

CITY OF PORTLAND, OREGON 1851

N.E. 47th Ave: N.E. Columbia Blvd. - N.E. Cornfoot Rd.

Stormwater Overview

1/4 SECTION 2841,2842 2941,2942
PROJECT NO. PBOT T00539 BES E10853
SHEET NO. D-1

Plot Date: 5/8/2019 10:51:33 AM Filename: \\pdotfnt\grp$cds_IL_Design\T00539 - NE 47th Ave LID - Columbia Blvd - Cornfoot Rd\CAD\PLAN_SHEETS\SHT D-01\STORMWATER OVERVIEW\PLOT_SHT_D-01.dgn

Stormwater Facilities Table

Stormwater Facility #	Sheet No.	Facility Type	Length (feet)	Alignment	Inside Facility Start Station	Inside Facility End Station	Concrete Inlet Ctrline Station	Concrete Checkdam Ctrline Station	Facility Width (ft)	Facility Area (sf)	Pay Area (sf)	R/W Drainage Area (sf)	Rock Gallery
1	D-3	Stormwater Planter	20.00	"47"	4+33.07	4+53.07	4+33.82	NA	3.00	60	74	2,900	Yes
							4+52.32						
2	D-3	Stormwater Planter	20.00	"47"	4+36.06	4+56.06	4+36.81	NA	3.00	60	74	2,900	Yes
							4+55.31						
3	D-3	Stormwater Planter	20.00	"47"	5+45.33	5+65.33	5+46.08	NA	3.00	60	74	2,900	Yes
							5+64.58						
4	D-3	Stormwater Planter	20.00	"47"	5+48.00	5+68.00	5+48.75	NA	3.00	60	74	2,900	Yes
							5+67.25						
5	D-3	Stormwater Planter	30.00	"47"	6+70.62	7+00.62	6+71.37	NA	3.00	90	109	4,350	Yes
							6+85.62						
							6+99.87						
6	D-3	Stormwater Planter	32.00	"47"	6+88.88	7+20.88	6+89.63	NA	3.00	96	116	4,640	Yes
							7+04.88						
							7+20.13						
7	D-3	Stormwater Planter	27.00	"47"	7+94.08	8+21.08	7+94.83	NA	3.00	81	98	3,915	Yes
							8+07.58						
							8+20.33						
8	D-3	Stormwater Planter	27.00	"47"	8+20.55	8+47.55	8+21.30	NA	3.00	81	98	3,915	Yes
							8+34.05						
							8+46.80						
9	D-4	Stormwater Planter	30.00	"47"	9+76.00	10+06.00	9+76.75	NA	3.00	90	109	4,350	Yes
							9+91.00						
							10+05.25						
10	D-4	Stormwater Planter	28.35	"47"	10+20.75	10+49.10	10+21.50	NA	3.00	85	103	4,111	Yes
							10+34.93						
							10+48.35						
11	D-4	Stormwater Planter	22.00	"47"	10+97.32	11+19.32	10+98.07	NA	3.00	66	81	3,190	Yes
							11+18.57						
12	D-4	Stormwater Planter	17.00	"47"	11+02.33	11+19.33	11+03.08	NA	3.00	51	63	2,465	Yes
							11+18.58						
13	D-4	Stormwater Planter	21.00	"47"	11+30.68	11+51.68	11+31.43	NA	3.00	63	77	3,045	Yes
							11+50.93						
14	D-4	Stormwater Planter	26.00	"47"	11+30.68	11+56.68	11+31.43	NA	3.00	78	95	3,770	Yes
							11+43.68						
							11+55.93						
15	D-4	Stormwater Planter	26.00	"47"	12+74.55	13+00.55	12+75.30	NA	3.00	78	95	3,770	Yes
							12+87.55						
							12+99.80						
16	D-4	Stormwater Planter	26.00	"47"	12+77.44	13+03.44	12+78.19	NA	3.00	78	95	3,770	Yes
							12+90.44						
							13+02.69						
17	D-5	Stormwater Planter	19.17	"47"	16+02.93	16+22.10	16+03.68	NA	3.00	57	82	2,755	Yes
							16+21.35						
18	D-5	Stormwater Planter	16.00	"47"	16+06.92	16+22.92	16+07.67	NA	3.00	48	60	2,320	Yes
							16+22.17						
19	D-6	Stormwater Planter	55.00	"47"	18+97.26	19+52.26	18+98.01	NA	3.00	165	196	7,975	Yes
							19+15.59						
							19+33.93						
							19+51.51						
20	D-6	Stormwater Planter	52.00	"47"	19+04.26	19+56.26	19+05.01	NA	3.00	156	186	7,540	Yes
							19+21.59						
							19+38.93						
							19+55.51						
21	D-7	Stormwater Planter	20.00	"47"	20+20.32	20+40.32	20+21.07	NA	3.00	60	74	2,900	Yes
							20+39.57						
22	D-7	Stormwater Planter	20.00	"47"	20+20.32	20+40.32	20+21.07	NA	3.00	60	74	2,900	Yes
							20+39.57						
23	D-7	Stormwater Planter	20.00	"47"	20+49.68	20+69.68	20+50.43	NA	3.00	60	74	2,900	Yes
							20+68.93						
24	D-7	Stormwater Planter	17.41	"47"	20+49.68	20+67.09	20+50.43	NA	3.00	52	64	2,524	Yes
							20+66.34						
25	D-7	Stormwater Planter	20.00	"47"	21+55.68	21+75.68	21+56.43	NA	3.00	60	74	2,900	Yes
							21+74.93						
26	D-7	Stormwater Planter	20.00	"47"	21+55.68	21+75.68	21+56.43	NA	3.00	60	74	2,900	Yes
							21+74.93						

DRAINAGE CRITERIA

Pollution reduction (TSS removal) is provided per the 2016 Stormwater Management Manual. Overflow from stormwater facilities will discharge to existing and new storm sewer systems that lead directly to the Whitaker and Columbia sloughs.

Plot Date: 5/8/2019 10:52:25 AM Filename: \\pdotnt\grp$cds_ll_Design\T00539 - NE 47th Ave LID - Columbia Blvd - Cornfoot Rd\CAD\PLAN_SHEETS\SHT D-02 STORMWATER FACILITY TABLE\PLOT_SHT_D-02.dgn

NO.	DATE	DESCRIPTION	APPD.

REVISION

DESIGNED BY R. Corti | DATE APPROVED April 2019
CAD BY C. Shearer | PROGRAM MGR. J. Dvorak
CHECKED BY D. Nunamaker | CONSTR. MGR. L. Moorhead
DESIGN MGR. M. Gualotunia

REGISTERED PROFESSIONAL ENGINEER 77531 OREGON MARCH 14, 2006 MELANIE GUALOTUNIA
Expires 6/30/19

APPROVAL:
CHIEF ENGINEER — REG. PROF. ENGR. NO. 16301PE — 5/15/19

CITY OF PORTLAND, OREGON
BUREAU OF ENVIRONMENTAL SERVICES
NICK FISH, COMMISSIONER
WILLIAM F. RYAN, P.E., CHIEF ENGINEER

N.E. 47th Ave: N.E. Columbia Blvd. - N.E. Cornfoot Rd.

Stormwater Faclities Table

1/4 SECTION 2841,2842 2941,2942
PROJECT NO. PBOT T00539 BES E10853
SHEET NO. D-2

Bid Documents

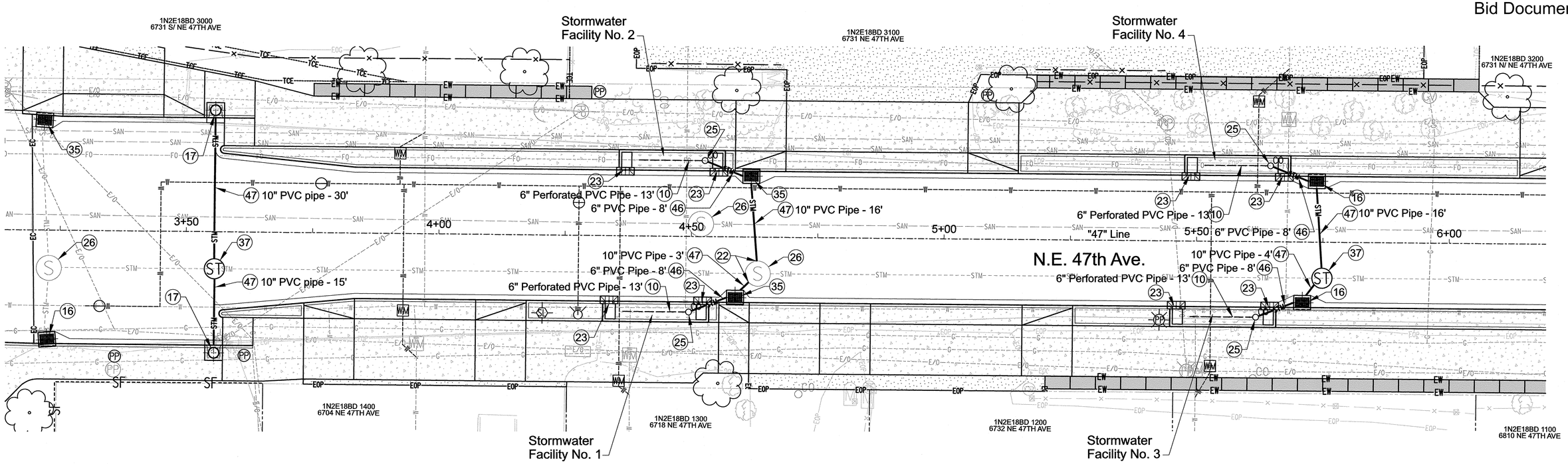

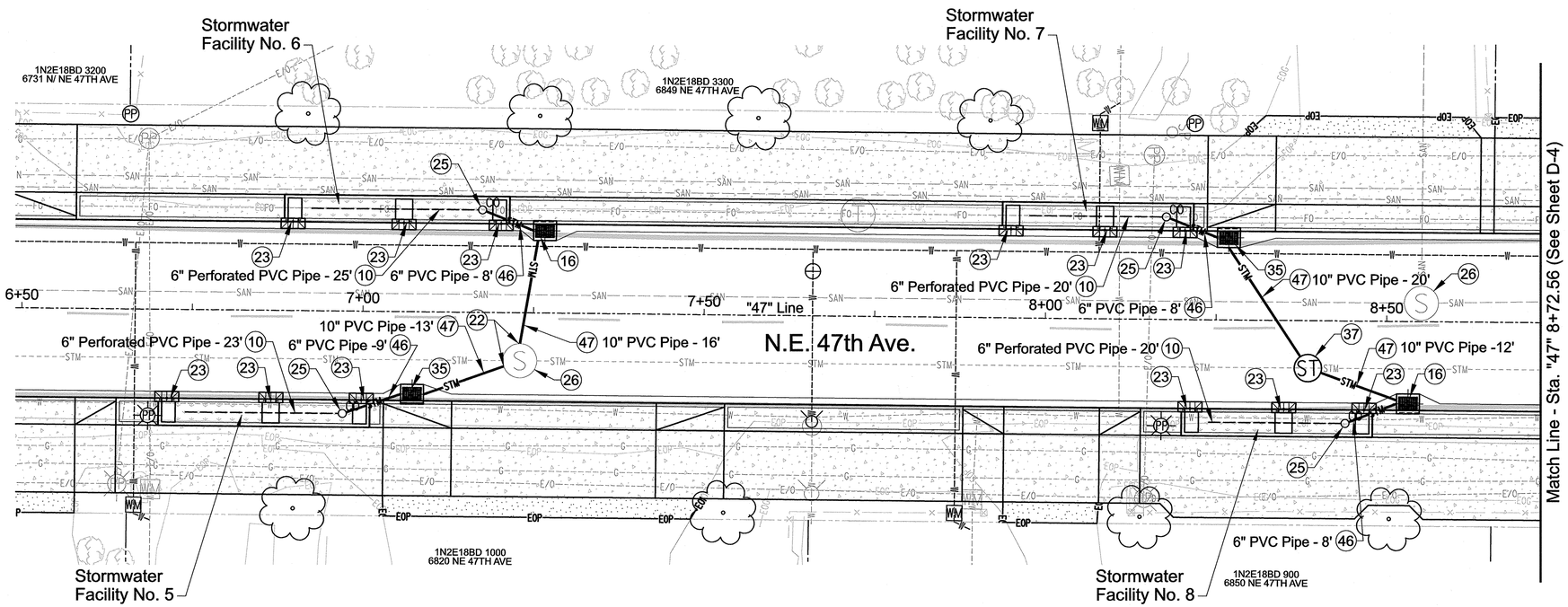

Construction Notes

10 Install 6" perforated PVC pipe - 140'. See Detail "B" on Sht. D-9.

16 Construct Type "CG-1" inlet - 5. See Std. Drg. No. RD366.

17 Construct Type "CG-3" inlet - 2. See Std. Drg. Nos. RD371 and RD372.

22 Connect pipe to existing manhole - 4.

23 Construct concrete inlet, type Metal - 20. See Detail "C" on Sht D-9.

25 Install cleanout - 8. See Detail "A" on Sht. D-9.

26 Adjust manhole (minor) - 5.

35 Construct Type "G-1" inlet - 5. See Std. Drg. No. RD364.

37 Construct 48" manhole over existing sewer - 3. See Std. Drg. No. P-150.

46 Install 6" PVC pipe - 65'

47 Install 10" PVC pipe - 145'.

0 10 20 30 40
FEET

NO.	DATE	DESCRIPTION	APPD.

REVISION

PBOT
PORTLAND BUREAU OF TRANSPORTATION

CITY ENGINEER — REG. PROF. ENGR. NO. 51538PE — DATE 5/20/19

DESIGNED BY	DATE APPROVED
R. Corti	April 2019
CAD BY	PROGRAM MGR.
C. Shearer	J. Dvorak
CHECKED BY	CONSTR. MGR.
D. Nunamaker	L. Moorhead
DESIGN MGR.	
M. Gualotunia	

REGISTERED PROFESSIONAL ENGINEER 77531 OREGON MARCH 14, 2006 MELANIE GUALOTUNIA
Expires 6/30/19

APPROVAL:
CHIEF ENGINEER — REG. PROF. ENGR. NO. 16301PE — 5/15/19

CITY OF PORTLAND, OREGON
BUREAU OF ENVIRONMENTAL SERVICES
NICK FISH — COMMISSIONER
WILLIAM F. RYAN, P.E. — CHIEF ENGINEER

N.E. 47th Ave: N.E. Columbia Blvd. - N.E. Cornfoot Rd.

Stormwater Plan

1/4 SECTION 2841,2842 2941,2942
PROJECT NO. PBOT T00539 BES E10853
SHEET NO. D-3

Plot Date: 5/8/2019 10:53:13 AM Filename: \\pdotnt\grp$cds_IL_Design\T00539 - NE 47th Ave LID - Columbia Blvd - Cornfoot Rd\CAD\PLAN_SHEETS\SHT D-03 STORMWATER PLAN\PLOT_SHT_D-03.dgn

Bid Documents

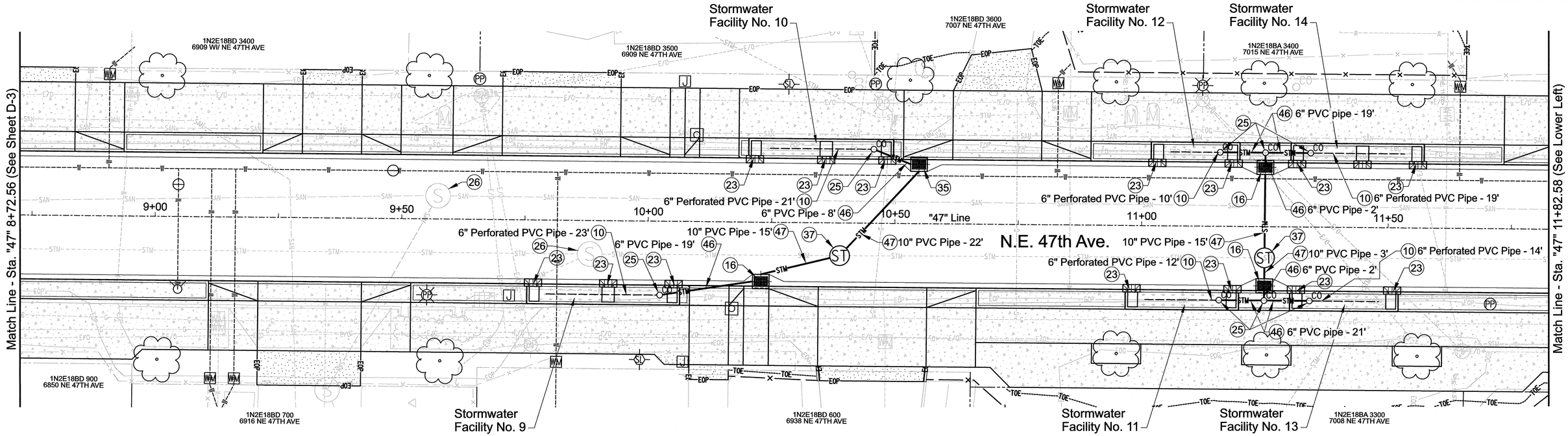

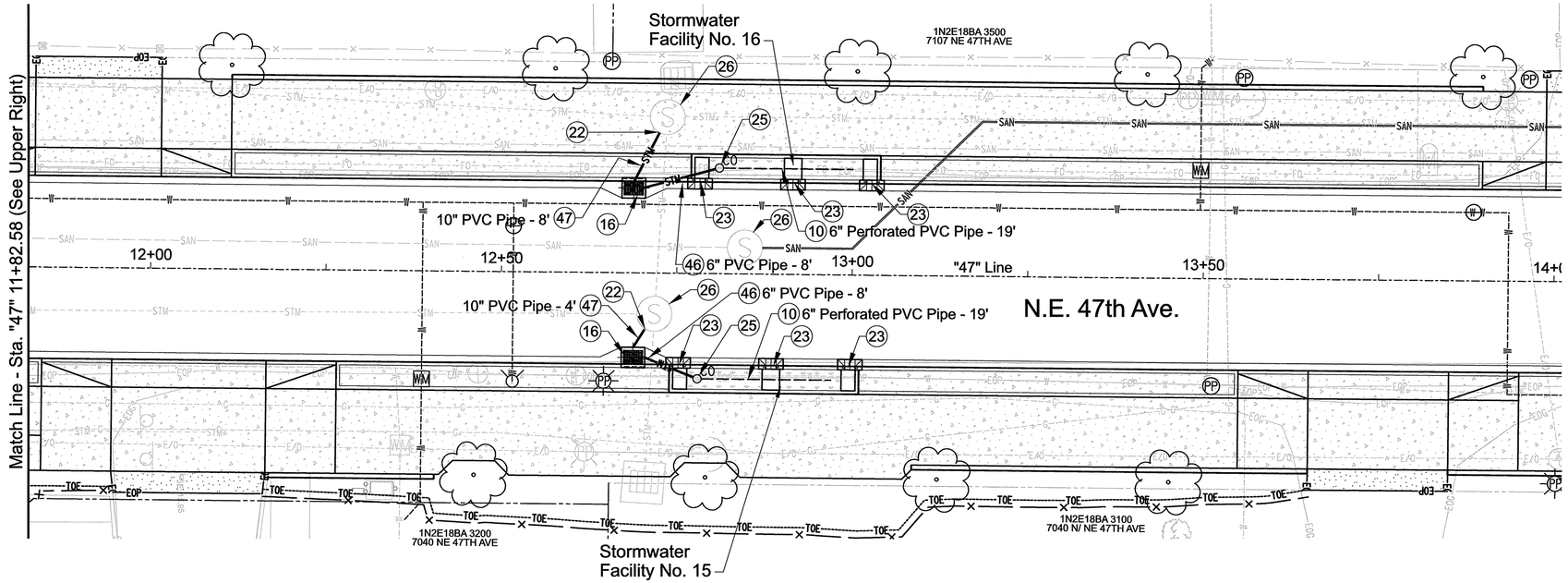

Construction Notes

10 Install 6" perforated PVC pipe - 140'. See Detail "B" on Sht. D-9.

16 Construct Type "CG-1" inlet - 5. See Std. Drg. No. RD366.

22 Connect pipe to existing manhole - 2.

23 Construct concrete inlet, type Metal - 21. See Detail "C" on Sht. D-9.

25 Install cleanout - 10. See Detail "A" on Sht. D-9.

26 Adjust manhole - 5.

35 Construct Type "G-1" inlet - 1. See Std. Drg. No. RD364.

37 Construct 48" Manhole over existing sewer - 2. See Std. Drg. No. P-150.

46 Install 6" PVC pipe - 87'.

47 Install 10" PVC pipe - 67'.

0 10 20 30 40
FEET

NO.	DATE	DESCRIPTION	APPD.

REVISION

PBOT
PORTLAND BUREAU OF TRANSPORTATION

CITY ENGINEER — REG. PROF. ENGR. NO. 51538PE — DATE 5/20/19

DESIGNED BY	DATE APPROVED
R. Corti	April 2019
CAD BY	PROGRAM MGR.
C. Shearer	J. Dvorak
CHECKED BY	CONSTR. MGR.
D. Nunamaker	L. Moorhead
DESIGN MGR.	
M. Gualotunia	

REGISTERED PROFESSIONAL ENGINEER 77531 OREGON MARCH 14, 2006 MELANIE GUALOTUNIA
Expires 6/30/19

APPROVAL:
CHIEF ENGINEER — REG. PROF. ENGR. NO. 16301PE — 5/15/19

CITY OF PORTLAND, OREGON
BUREAU OF ENVIRONMENTAL SERVICES
NICK FISH — COMMISSIONER
WILLIAM F. RYAN, P.E. — CHIEF ENGINEER

CITY OF PORTLAND OREGON 1851

N.E. 47th Ave: N.E. Columbia Blvd. - N.E. Cornfoot Rd.

Stormwater Plan

1/4 SECTION: 2841,2842 2941,2942
PROJECT NO.: PBOT T00539 BES E10853
SHEET NO.: D-4

Plot Date: 5/8/2019 10:53:47 AM Filename: \\pdotnt\grp$cds_II_Design\T00539 - NE 47th Ave LID - Columbia Blvd - Cornfoot Rd\CAD\PLAN_SHEETS\SHT D-04 STORMWATER PLAN\PLOT_SHT_D-04.dgn

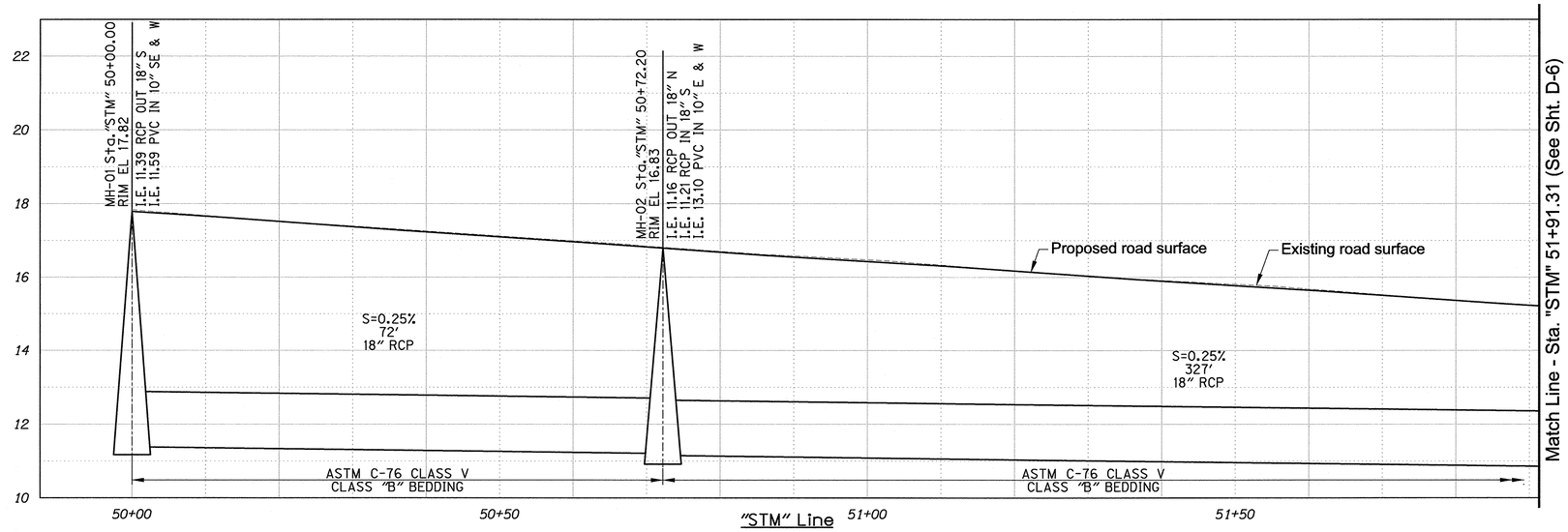

Profile

Scale: 1" = 2' Vert.
1" = 10' Horiz.

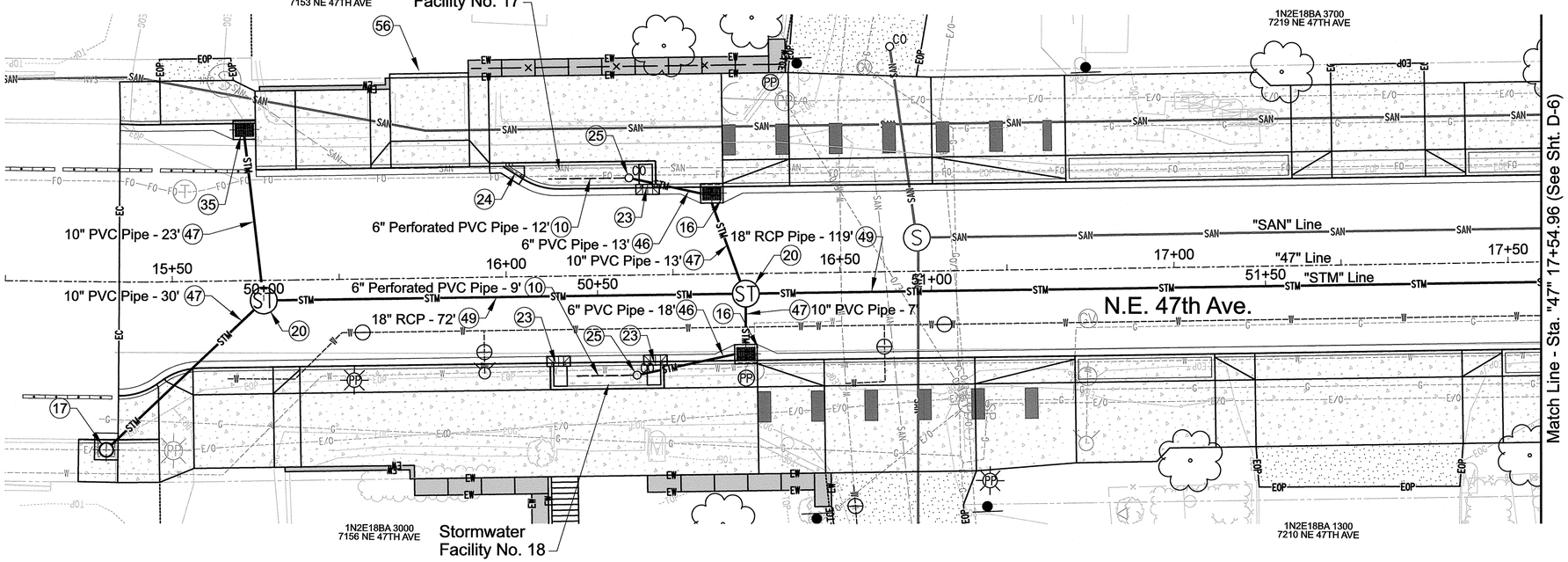

Construction Notes

10 Install 6" perforated PVC pipe - 21'. See Detail "B" on Sht. D-9.

16 Construct Type "CG-1" inlet - 2. See Std. Drg. No. RD366.

17 Construct Type "CG-3" inlet - 1. See Std. Drg. Nos. RD371 and RD372.

20 Construct 48" dia. std. precast concrete manhole - 2. See Std. Drg. No. P-150.

23 Construct concrete inlet, type Metal - 3. See Detail "C" on Sht. D-9.

24 Construct concrete inlet, type Metal Modified - 1. See Detail "A" on Sht. D-10.

25 Install cleanout - 2. See Detail "A" on Sht. D-9.

35 Install Type "G-1" inlet - 1. See Std. Drg. No. RD364.

46 Install 6" PVC pipe - 31'

47 Install 10" PVC pipe - 73'.

49 Install 18" RCP - 191'.

56 Install ACO KlassikDrain-KS100 trench drain with slotted resin composit grate at garage entrance - 10 LF. Connect outlet to storm inlet or stowmwater facility.

0 10 20 30 40
FEET

NO.	DATE	DESCRIPTION	APPD.

REVISION

PBOT
PORTLAND BUREAU OF TRANSPORTATION

CITY ENGINEER — REG. PROF. ENGR. NO. 51538PE — DATE 5/20/19

DESIGNED BY R. Corti	DATE APPROVED April 2019
CAD BY C. Shearer	PROGRAM MGR. J. Dvorak
CHECKED BY D. Nunamaker	CONSTR. MGR. L. Moorhead
DESIGN MGR. M. Gualotunia	

REGISTERED PROFESSIONAL ENGINEER 77531 OREGON MARCH 14, 2006 MELANIE GUALOTUNIA
Expires 6/30/19

APPROVAL:
CHIEF ENGINEER — REG. PROF. ENGR. NO. 16301PE — 5/15/19

CITY OF PORTLAND, OREGON
BUREAU OF ENVIRONMENTAL SERVICES
NICK FISH — COMMISSIONER
WILLIAM F. RYAN, P.E. — CHIEF ENGINEER

CITY OF PORTLAND OREGON 1851

N.E. 47th Ave: N.E. Columbia Blvd. - N.E. Cornfoot Rd.

Stormwater Plan and Profile

1/4 SECTION 2841,2842 2941,2942
PROJECT NO. PBOT T00539 BES E10853
SHEET NO. D-5

Bid Documents

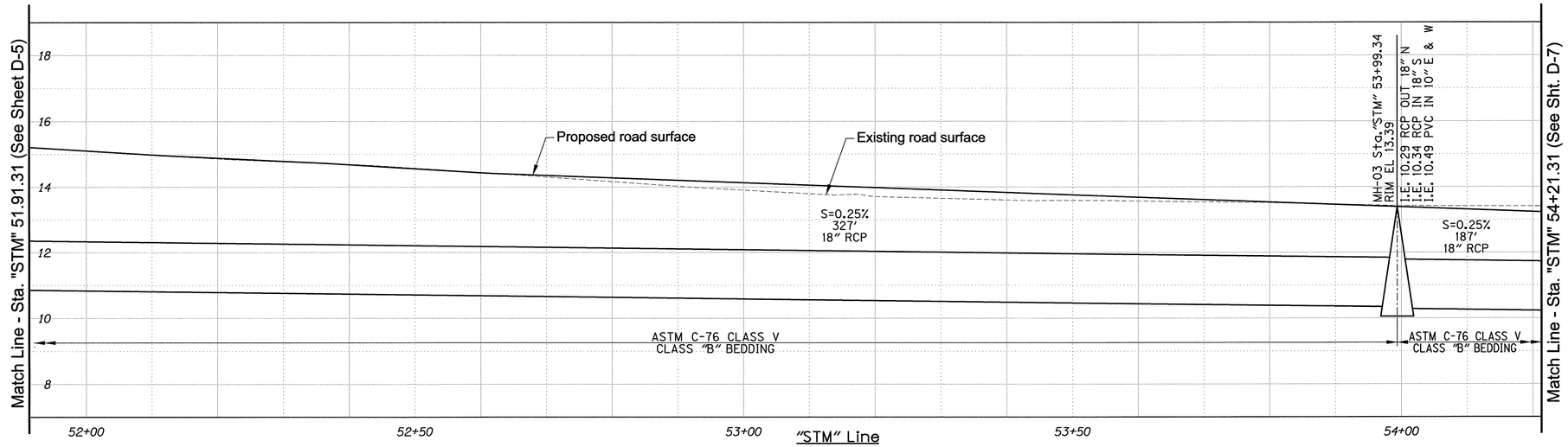

Profile

Scale: 1" = 2' Vert.
1" = 10' Horiz.

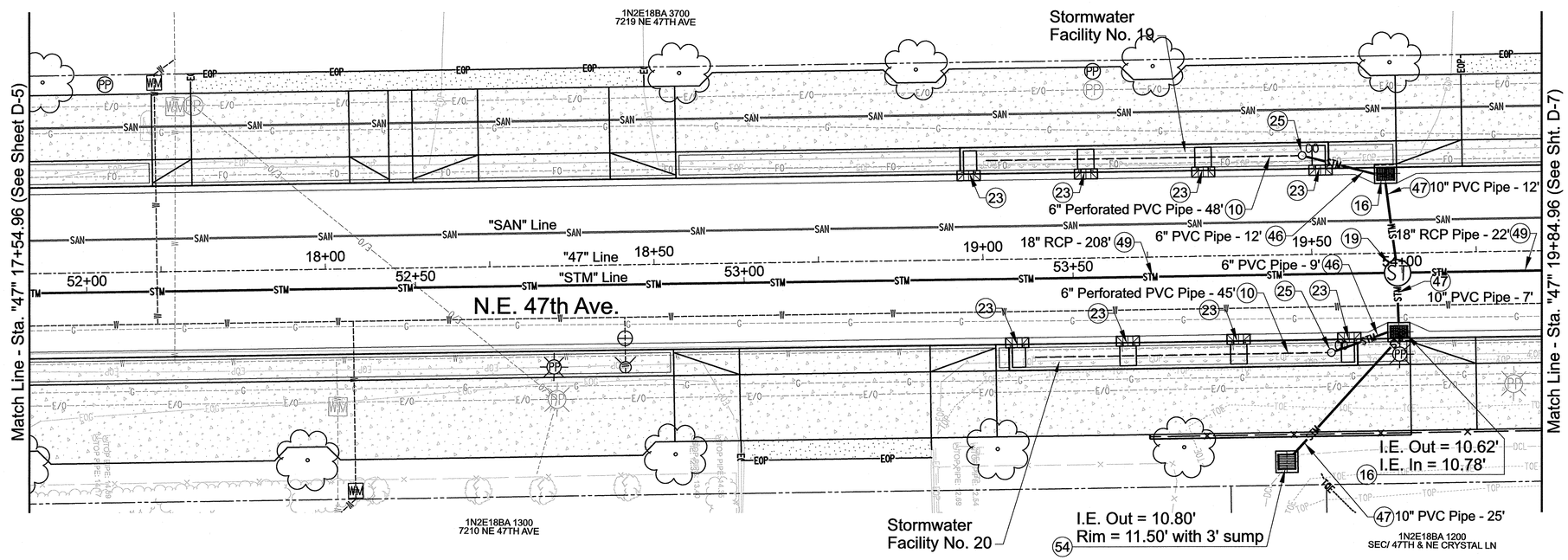

Construction Notes

10 Install 6" perforated PVC pipe - 93'.
See Detail "B" on Sht. D-9.

16 Construct Type "CG-1" inlet - 2.
See Std. Drg. No. RD366.

19 Install 36" manhole - 1.
See Detail "A" on Sht. D-11.

23 Construct concrete inlet, type Metal - 8.
See Detail "C" on Sht. D-9.

25 Install cleanout - 2. See Detail "A" on Sht. D-9.

46 Install 6" PVC pipe - 21'.

47 Install 10" PVC pipe - 44'.

49 Install 18" RCP - 230'.

54 Construct Type "D" Ditch Inlet - 1.
See Std. Drg. No. RD370.

0 10 20 30 40
FEET

NO.	DATE	DESCRIPTION	APPD.

REVISION

PBOT
PORTLAND BUREAU OF TRANSPORTATION

CITY ENGINEER — REG. PROF. ENGR. NO. 51538PE — DATE 5/20/19

DESIGNED BY	DATE APPROVED
R. Corti	April 2019
CAD BY	PROGRAM MGR.
C. Shearer	J. Dvorak
CHECKED BY	CONSTR. MGR.
D. Nunamaker	L. Moorhead
DESIGN MGR.	
M. Gualotunia	

REGISTERED PROFESSIONAL ENGINEER 77531 OREGON MARCH 14, 2006 MELANIE GUALOTUNIA
Expires 6/30/19

APPROVAL:

CHIEF ENGINEER — REG. PROF. ENGR. NO. 16301PE — 5/15/19

CITY OF PORTLAND, OREGON
BUREAU OF ENVIRONMENTAL SERVICES
NICK FISH — COMMISSIONER
WILLIAM F. RYAN, P.E. — CHIEF ENGINEER

CITY OF PORTLAND, OREGON 1851

N.E. 47th Ave: N.E. Columbia Blvd. - N.E. Cornfoot Rd.

Stormwater Plan and Profile

1/4 SECTION: 2841,2842 2941,2942
PROJECT NO.: PBOT T00539 BES E10853
SHEET NO.: D-6

Plot Date: 5/8/2019 10:54:55 AM Filename: \\pdotnt\grp$cds_IL_Design\T00539 - NE 47th Ave LID - Columbia Blvd - Cornfoot Rd\CAD\PLAN_SHEETS\SHT D-06 STORMWATER PLAN\PLOT_SHT_D-06.dgn

Bid Documents

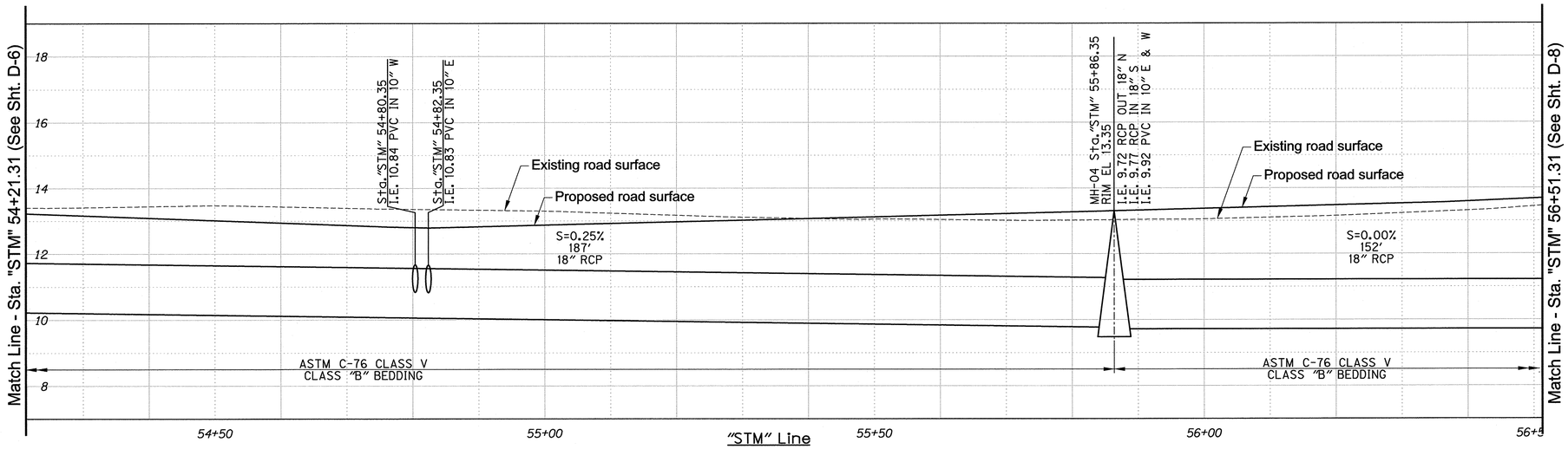

Profile

Scale: 1" = 2' Vert.
1" = 10' Horiz.

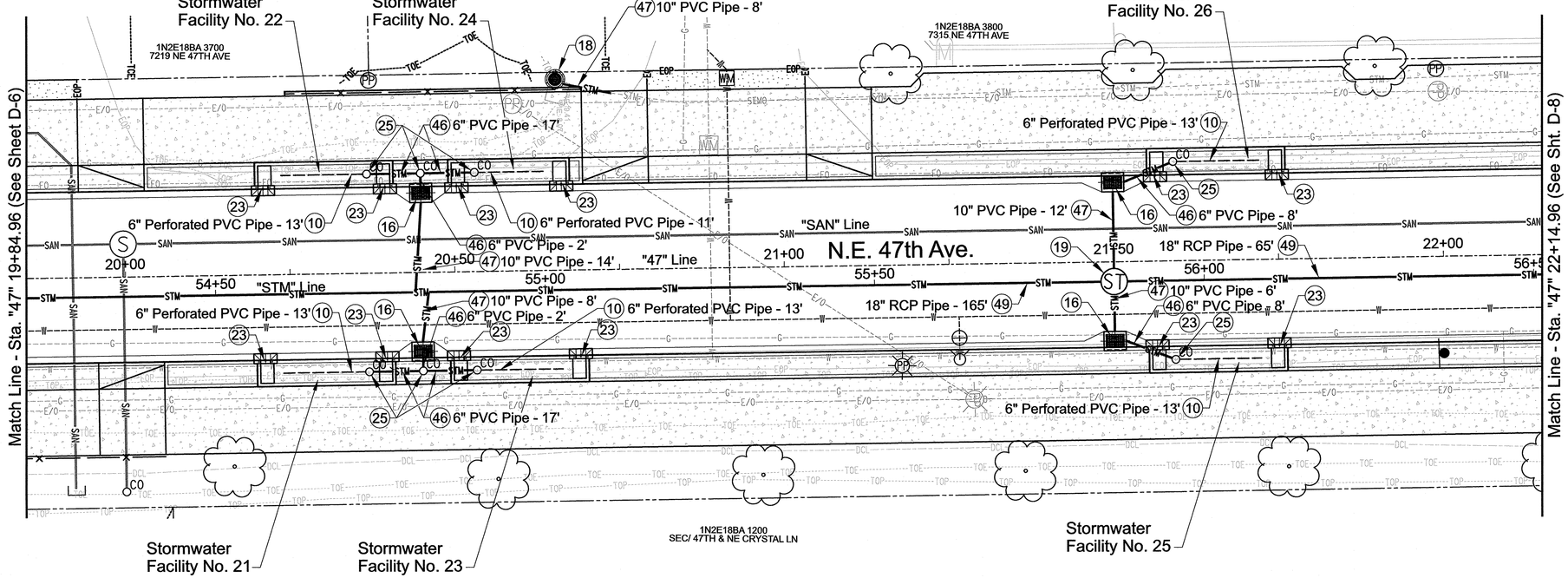

Construction Notes

10 Install 6" perforated PVC pipe - 76'.
See Detail "B" on Sht. D-9.

16 Construct Type "CG-1" inlet - 4.
See Std. Drg. No. RD366.

18 Construct beehive inlet - 1.
See Detail "B" on Sht. D-11.

19 Install 36" manhole - 1.
See Detail "A" on Sht. D-11.

23 Construct concrete inlet, type Metal - 12.
See Detail "C" on Sht. D-9.

25 Install cleanout - 8. See Detail "A" on Sht. D-9.

46 Install 6" PVC pipe - 54'.

47 Install 10" PVC pipe - 48'.

49 Install 18" RCP pipe - 230'.

0 10 20 30 40
FEET

NO.	DATE	DESCRIPTION	APPD.

REVISION

PBOT
PORTLAND BUREAU OF TRANSPORTATION

CITY ENGINEER — REG. PROF. ENGR. NO. 51538PE — DATE 5/20/19

DESIGNED BY R. Corti	DATE APPROVED April 2019
CAD BY C. Shearer	PROGRAM MGR. J. Dvorak
CHECKED BY D. Nunamaker	CONSTR. MGR. L. Moorhead
DESIGN MGR. M. Gualotunia	

REGISTERED PROFESSIONAL ENGINEER 77531 OREGON MARCH 14, 2006 MELANIE GUALOTUNIA
Expires 6/30/19

APPROVAL:
CHIEF ENGINEER — REG. PROF. ENGR. NO. 19307PE — 5/15/19

CITY OF PORTLAND, OREGON
BUREAU OF ENVIRONMENTAL SERVICES
NICK FISH — COMMISSIONER
WILLIAM F. RYAN, P.E. — CHIEF ENGINEER

N.E. 47th Ave: N.E. Columbia Blvd. - N.E. Cornfoot Rd.

Stormwater Plan and Profile

1/4 SECTION 2841,2842 2941,2942
PROJECT NO. PBOT T00539 BES E10853
SHEET NO. D-7

Plot Date: 5/8/2019 10:55:42 AM Filename: \\pdotnt\grp$cds_ll_Design\T00539 - NE 47th Ave LID - Columbia Blvd - Cornfoot Rd\CAD\PLAN_SHEETS\SHT D-07 STORMWATER PLAN\PLOT_SHT_D-07.dgn

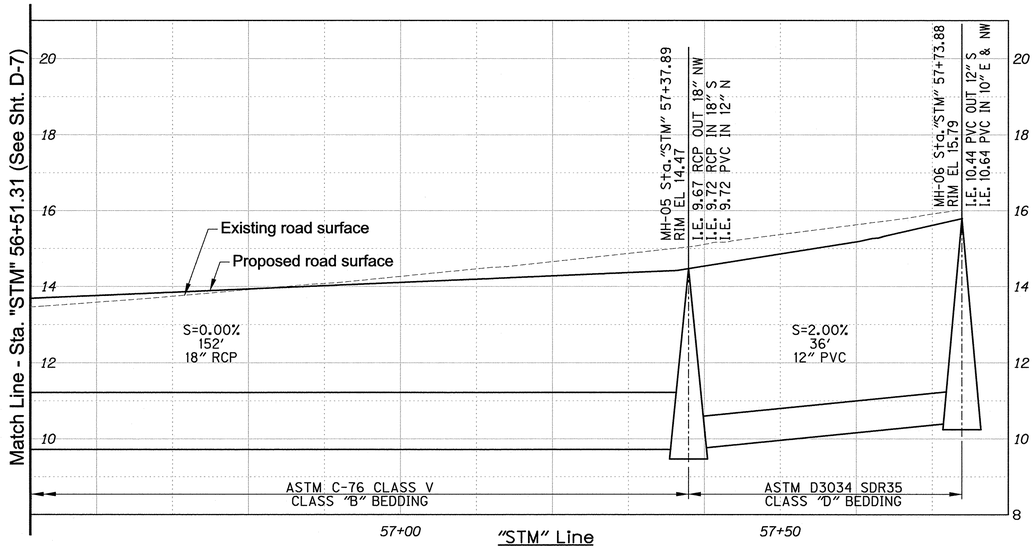

Profile

Scale: 1" = 2' Vert.
1" = 10' Horiz.

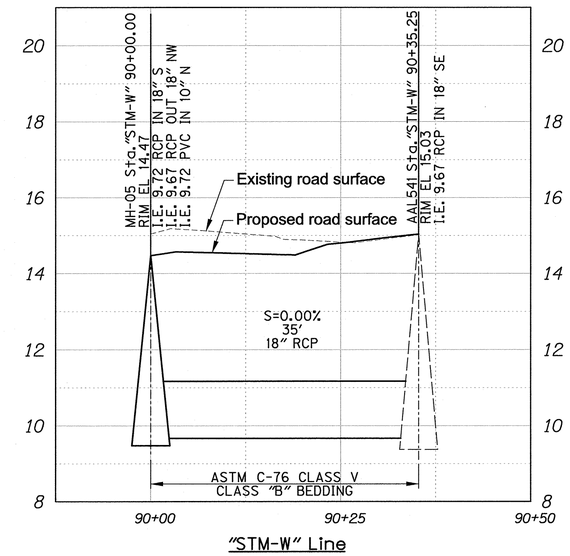

Profile

Scale: 1" = 2' Vert.
1" = 10' Horiz.

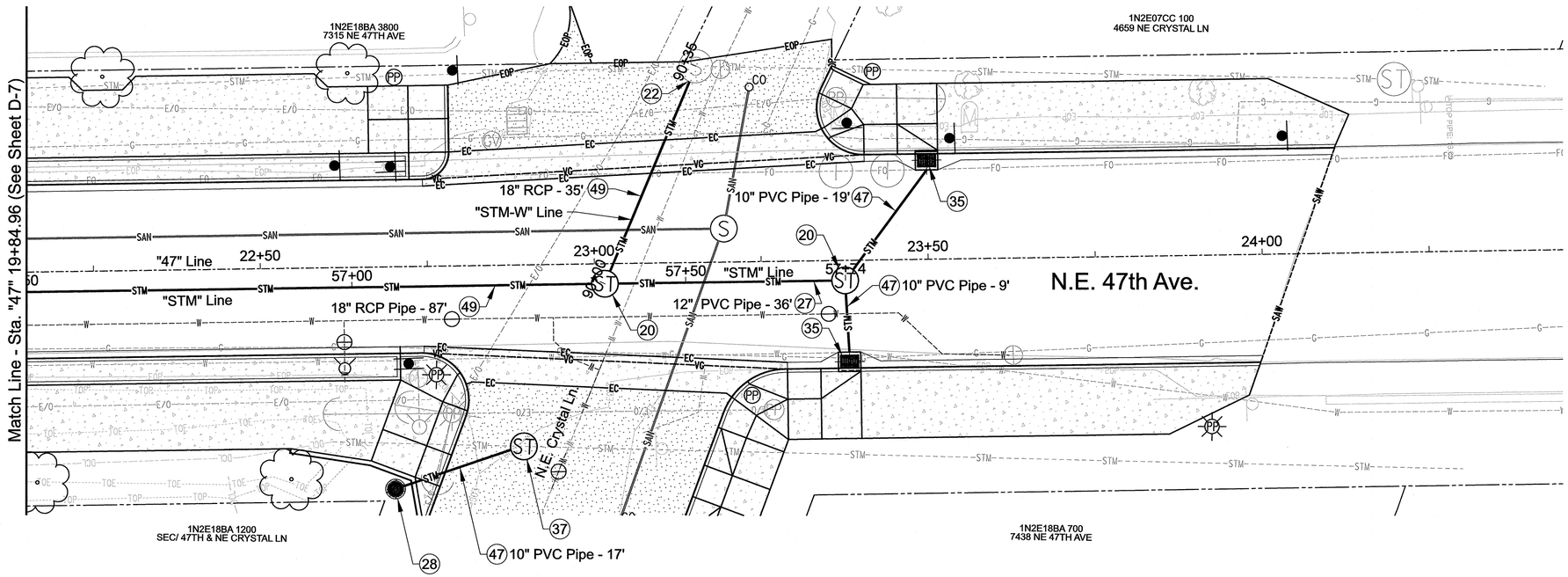

Construction Notes

20 Construct 48" dia. std. precast concrete manhole - 3. See Std. Drg. No. P-150.

22 Connect pipe to existing manhole - 1.

27 Install 12" PVC pipe - 36'.

28 Construct beehive inlet - 1. See Detail "B" on Sht. D-11.

35 Construct Type "G-1" inlet - 2. See Std. Drg. No. RD364.

37 Construct 48" manhole over existing sewer - 1. See Std. Drg. No. P-150.

47 Install 10" PVC pipe - 45'.

49 Install 18" RCP pipe - 122'.

0 10 20 30 40
FEET

NO.	DATE	DESCRIPTION	APPD.

REVISION

PBOT
PORTLAND BUREAU OF TRANSPORTATION

CITY ENGINEER — REG. PROF. ENGR. NO. 51538PE — DATE 5/20/19

DESIGNED BY R. Corti	DATE APPROVED April 2019
CAD BY C. Shearer	PROGRAM MGR. J. Dvorak
CHECKED BY D. Nunamaker	CONSTR. MGR. L. Moorhead
DESIGN MGR. M. Gualotunia	

REGISTERED PROFESSIONAL ENGINEER 77531 OREGON MARCH 14, 2006 MELANIE GUALOTUNIA
Expires 6/30/19

APPROVAL:
CHIEF ENGINEER — REG. PROF. ENGR. NO. 16301PE — 5/15/19

CITY OF PORTLAND, OREGON
BUREAU OF ENVIRONMENTAL SERVICES
NICK FISH — COMMISSIONER
WILLIAM F. RYAN, P.E. — CHIEF ENGINEER

CITY OF PORTLAND OREGON 1851

N.E. 47th Ave: N.E. Columbia Blvd. - N.E. Cornfoot Rd.

Stormwater Plan and Profile

1/4 SECTION 2841,2842 2941,2942
PROJECT NO. PBOT T00539 BES E10853
SHEET NO. D-8

Plot Date: 5/8/2019 10:56:07 AM Filename: \\pdotnt\grp$cds_LDesign\T00539 - NE 47th Ave LID - Columbia Blvd - Cornfoot Rd\CAD\PLAN_SHEETS\SHT D-08 STORMWATER PLAN\PLOT_SHT_D-08.dgn

Bid Documents

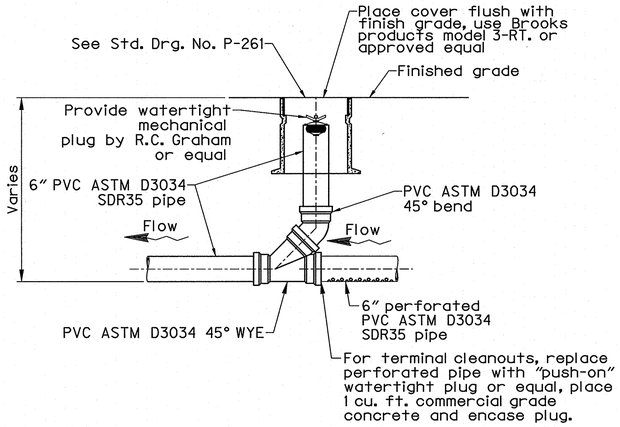

Note:
Install cleanout at centerline of facility and 3.5' from inside face of end wall

Stormwater Facility Cleanout (A / -)
Scale: 1" = 1'-0"

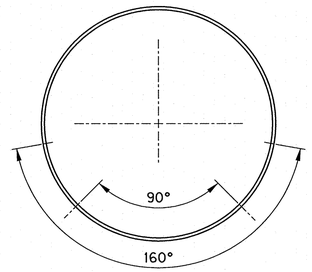

Hole Size	3/8"
Center-to-Center	3" +/- 1/4"
Rows of Holes	4,2@90°, 2@160°+/-3°

Section

Pipe Perforation Pattern (B / -)
Scale: 6" = 1'-0"

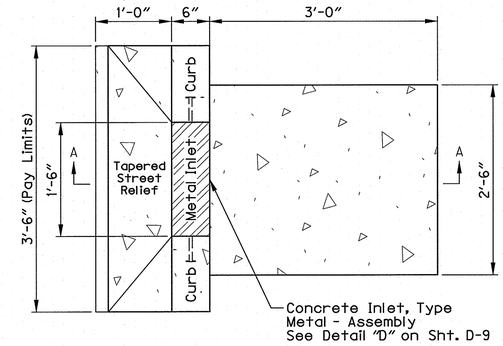

Plan

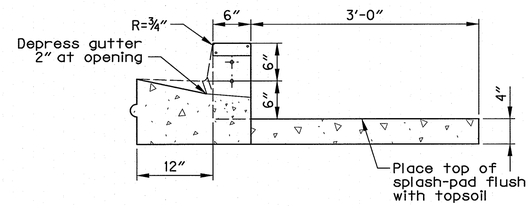

Section A-A

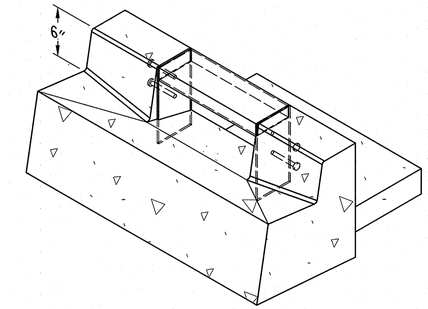

Isometric

Concrete Inlet, Type Metal (C / D-3 thru D-8)
Scale: 1" = 1'

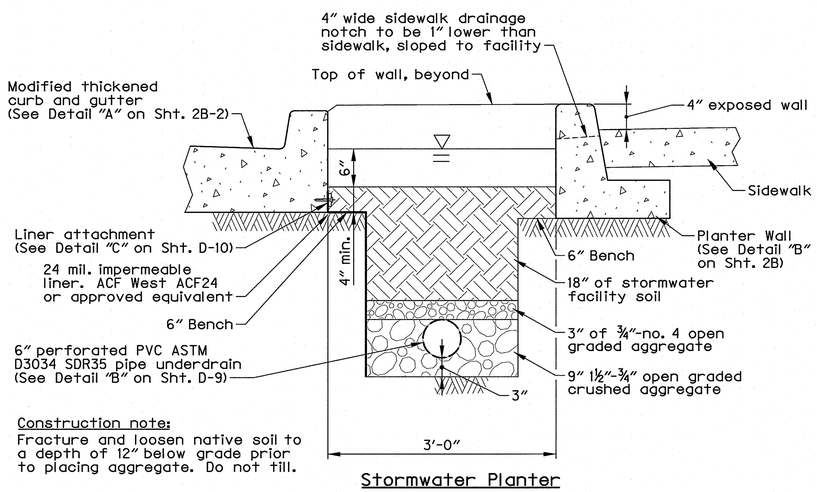

Construction note:
Fracture and loosen native soil to a depth of 12" below grade prior to placing aggregate. Do not till.

Stormwater Planter

Section (E / D-3 thru D-8)
Scale: 1" = 1'-0"

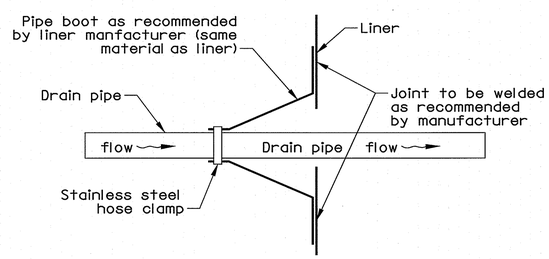

Pipe Boot (F / D-3 thru D-8)
Scale: NTS

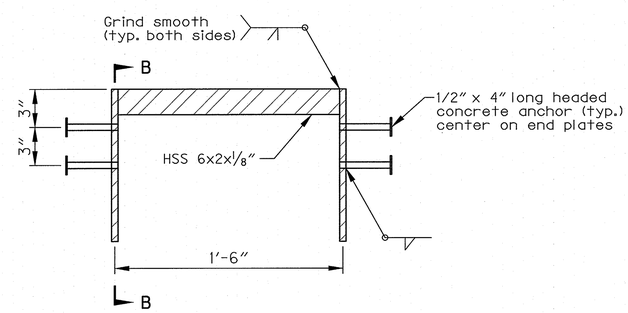

Elevation

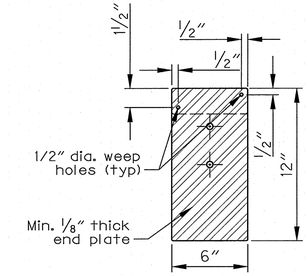

Section B-B

Notes:

1. Headed concrete anchors shall meet the requirements of ASTM A-108.
2. HSS 6x2x⅛" tube shall meet the requirements of ASTM A-500 Grade B.
3. End plates shall meet the requirements of ASTM A-36.
4. Entire assembly shall be hot-dip galvanized in accordance with ASTM A-123.

Concrete Inlet, Type Metal - Assembly (D / D-3 thru D-8)
Scale: 2" = 1'

NO.	DATE	DESCRIPTION	APPD.

REVISION

DESIGNED BY R. Corti	DATE APPROVED April 2019
CAD BY C. Shearer	PROGRAM MGR. J. Dvorak
CHECKED BY D. Nunamaker	CONSTR. MGR. L. Moorhead
DESIGN MGR. M. Gualotunia	

REGISTERED PROFESSIONAL ENGINEER 77531 OREGON MARCH 14, 2006 MELANIE GUALOTUNIA
Expires 6/30/19

APPROVAL:
CHIEF ENGINEER — REG. PROF. ENGR. NO. 16301PE — 5/20/19

CITY OF PORTLAND, OREGON
BUREAU OF ENVIRONMENTAL SERVICES
NICK FISH, COMMISSIONER
WILLIAM F. RYAN, P.E., CHIEF ENGINEER

N.E. 47th Ave: N.E. Columbia Blvd. - N.E. Cornfoot Rd.

Stormwater Details

1/4 SECTION: 2841,2842 2941,2942
PROJECT NO.: PBOT T00539 BES E10853
SHEET NO.: D-9

Plot Date: 5/8/2019 10:56:29 AM Filename: \\pdotnt\grp$cds_il_Design\T00539 - NE 47th Ave LID - Columbia Blvd - Cornfoot Rd\CAD\PLAN_SHEETS\SHT D-09 STORMWATER SECTIONS AND DETAILS\PLOT_SHT_D-09.dgn

Bid Documents

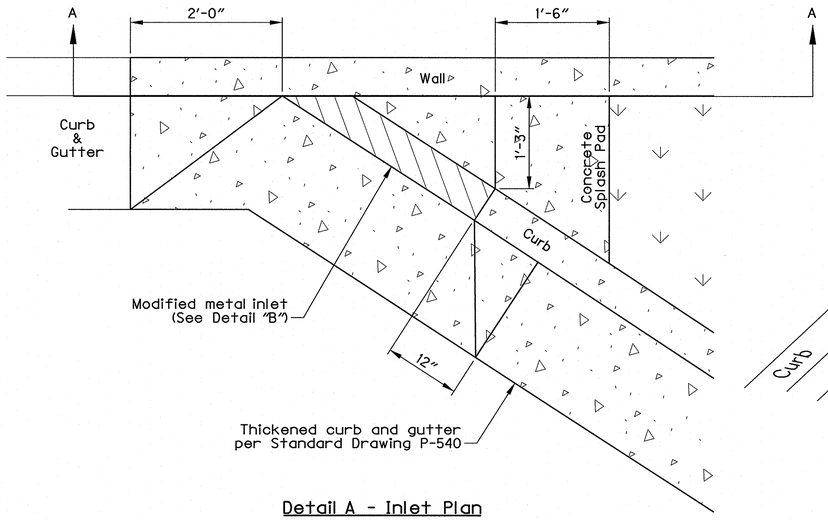

Detail A - Inlet Plan

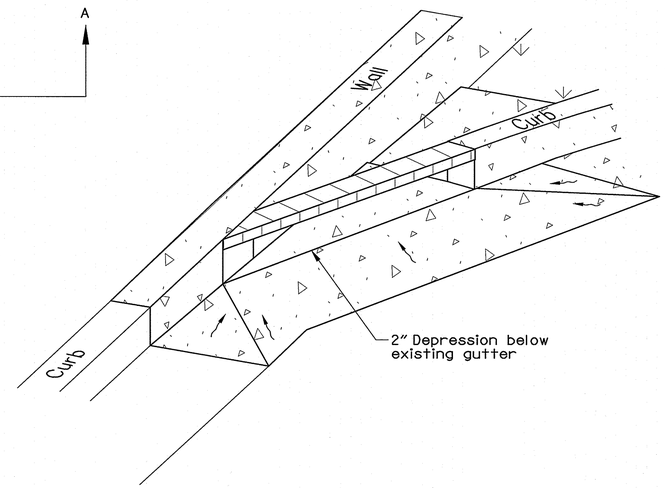

Detail B - Inlet Perspective

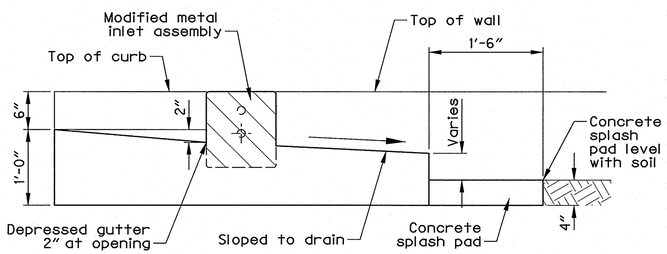

Section A-A

Concrete Inlet, Type Metal Modified (A / D-5)

Scale: 1" = 1'

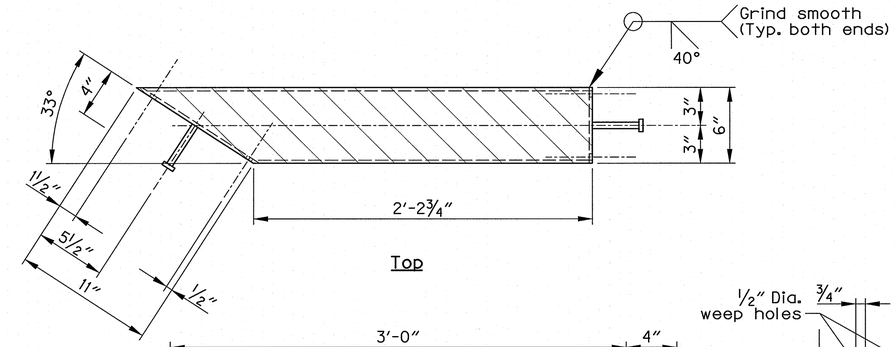

Top

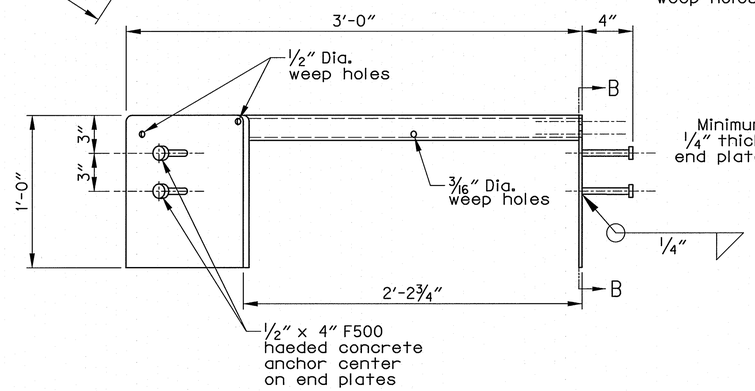

Elevation

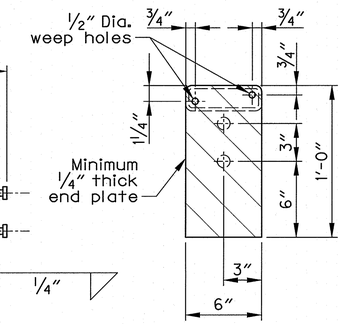

Section B-B

Concrete Inlet, Type Metal Modified - Assembly (B / D-5)

Scale: 2" = 1'

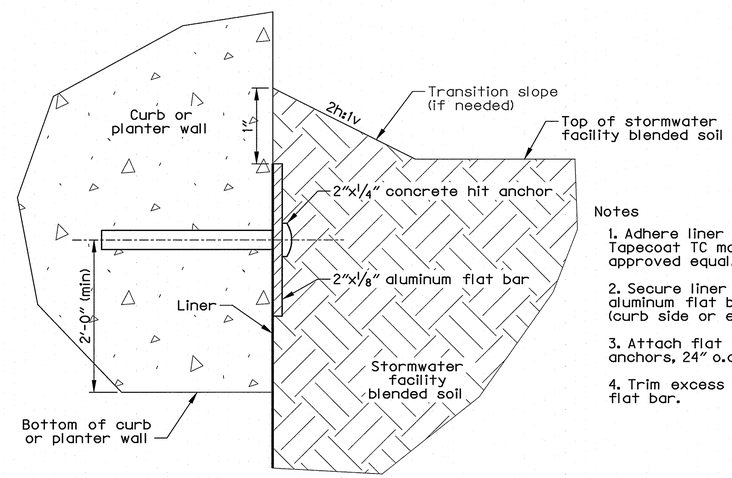

Notes

1. Adhere liner to concrete with Tapecoat TC moldable sealant, or approved equal.
2. Secure liner to concrete with 2" aluminum flat bar, placed as directed (curb side or entire facility).
3. Attach flat bar with concrete hit anchors, 24" o.c.
4. Trim excess liner to the top of the flat bar.

Liner Attachment (C / D-3 thru D-8)

Scale: 1" = 1'

NO.	DATE	DESCRIPTION	APPD.
		REVISION	

DESIGNED BY R. Corti	DATE APPROVED April 2019
CAD BY C. Shearer	PROGRAM MGR. J. Dvorak
CHECKED BY D. Nunamaker	CONSTR. MGR. L. Moorhead
DESIGN MGR. M. Gualotunia	

REGISTERED PROFESSIONAL ENGINEER 77531 OREGON MARCH 14, 2005 MELANIE GUALOTUNIA
Expires 6/30/19

APPROVAL:

CHIEF ENGINEER — REG. PROF. ENGR. NO. 16301PE — 5/20/19

CITY OF PORTLAND, OREGON
BUREAU OF ENVIRONMENTAL SERVICES
NICK FISH, COMMISSIONER
WILLIAM F. RYAN, P.E., CHIEF ENGINEER

N.E. 47th Ave: N.E. Columbia Blvd. - N.E. Cornfoot Rd.

Stormwater Details

1/4 SECTION 2841,2842 2941,2942
PROJECT NO. PBOT T00539 BES E10853
SHEET NO. D-10

Plot Date: 5/8/2019 10:56:52 AM Filename: \\pdotnt\grp$cds_IL_Design\T00539 - NE 47th Ave LID - Columbia Blvd - Cornfoot Rd\CAD\PLAN_SHEETS\SHT D-10 STORMWATER SECTIONS AND DETAILS\PLOT_SHT_D-10.dgn

Bid Documents

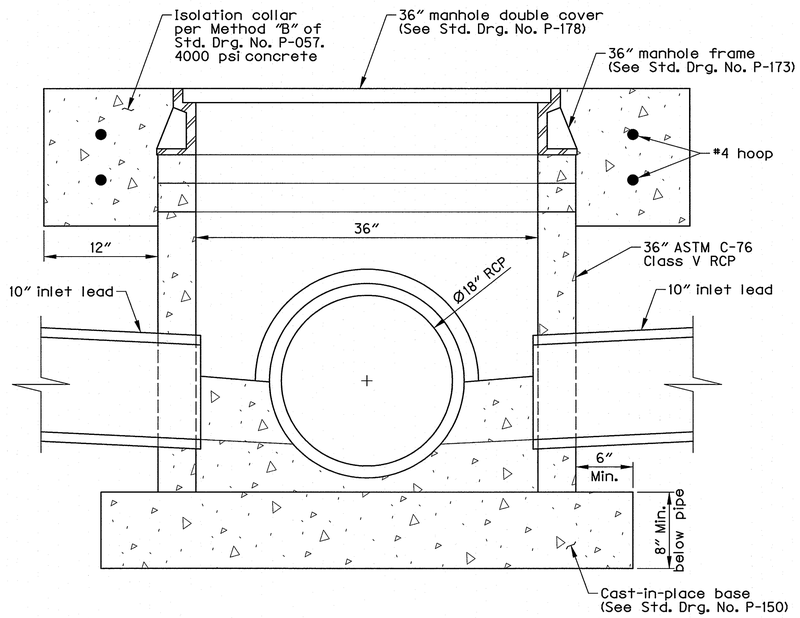

Section

36-inch Manhole Detail (A / D-6, D-7)

Not to Scale

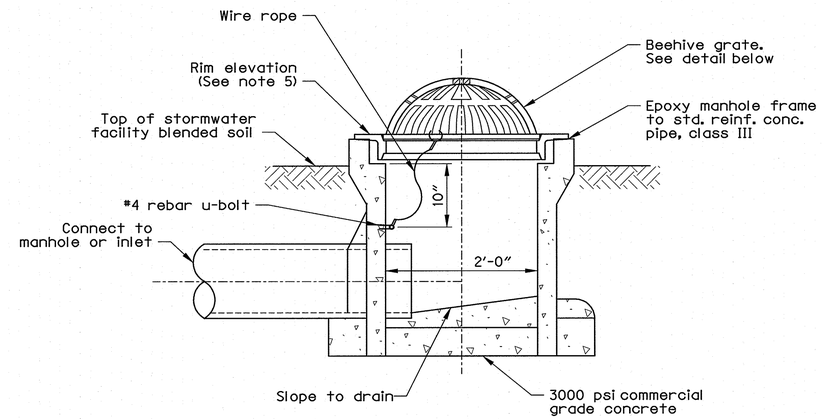

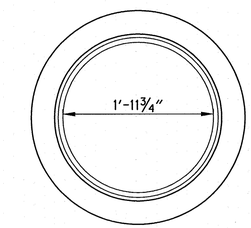

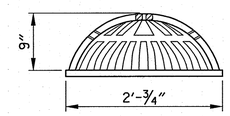

Beehive Grate

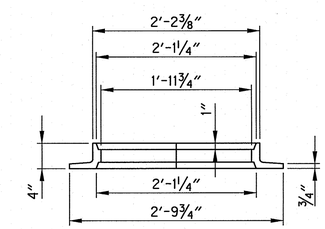

24"x4" Reversible Manhole Frame

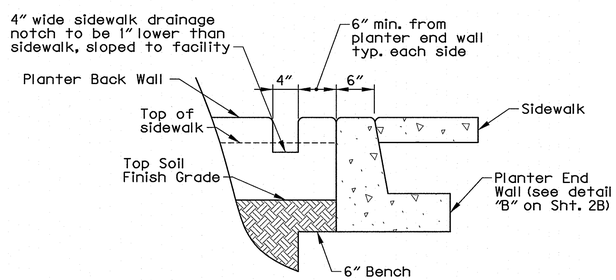

Notes:
1. Place one notch at sidewalk low point
2. Place additional notches at 6' on center spacing

Sidewalk Notch Detail (C / -)

Scale: 1" = 1'

Notes:

1. Wire rope to be ⅛"-3/16" stainless steel, 7 strands of 19 wires.
2. Secure grate in place with 54 inches of wire rope. Loop ends of wire rope around u-bolt and grate. Crimp each end of wire rope with 3" overlap.
3. Drill 2" deep holes into pipe and epoxy #4 rebar u-bolt (2"x4") in holes.
4. Grate to be cast iron, ASTM A48 CL30.
5. Rim elevation must be 1" lower than: sidewalk notches, top of planter wall, top of slope, outlet notch, or inlets, whichever is lowest.

Concrete Inlet, Type Beehive (B / -)

Scale: 1" = 1'

NO.	DATE	DESCRIPTION	APPD.

REVISION

DESIGNED BY R. Corti	DATE APPROVED April 2019
CAD BY C. Shearer	PROGRAM MGR. J. Dvorak
CHECKED BY D. Nunamaker	CONSTR. MGR. L. Moorhead
DESIGN MGR. M. Gualotunia	

REGISTERED PROFESSIONAL ENGINEER 77531 OREGON MARCH 14, 2006 MELANIE GUALOTUNIA
Expires 6/30/19

APPROVAL:

CHIEF ENGINEER — REG. PROF. ENGR. NO. 16301PE — 5/20/19

CITY OF PORTLAND, OREGON
BUREAU OF ENVIRONMENTAL SERVICES
NICK FISH, COMMISSIONER
WILLIAM F. RYAN, P.E., CHIEF ENGINEER

N.E. 47th Ave: N.E. Columbia Blvd. - N.E. Cornfoot Rd.

Stormwater Details

1/4 SECTION 2841,2842 2941,2942
PROJECT NO. PBOT T00539 BES E10853
SHEET NO. D-11

Plot Date: 5/8/2019 10:57:14 AM Filename: \\pdotnt\grp$cds_IL_Design\T00539 - NE 47th Ave LID - Columbia Blvd - Cornfoot Rd\CAD\PLAN_SHEETS\SHT D-11 STORMWATER SECTIONS AND DETAILS\PLOT_SHT_D-11.dgn

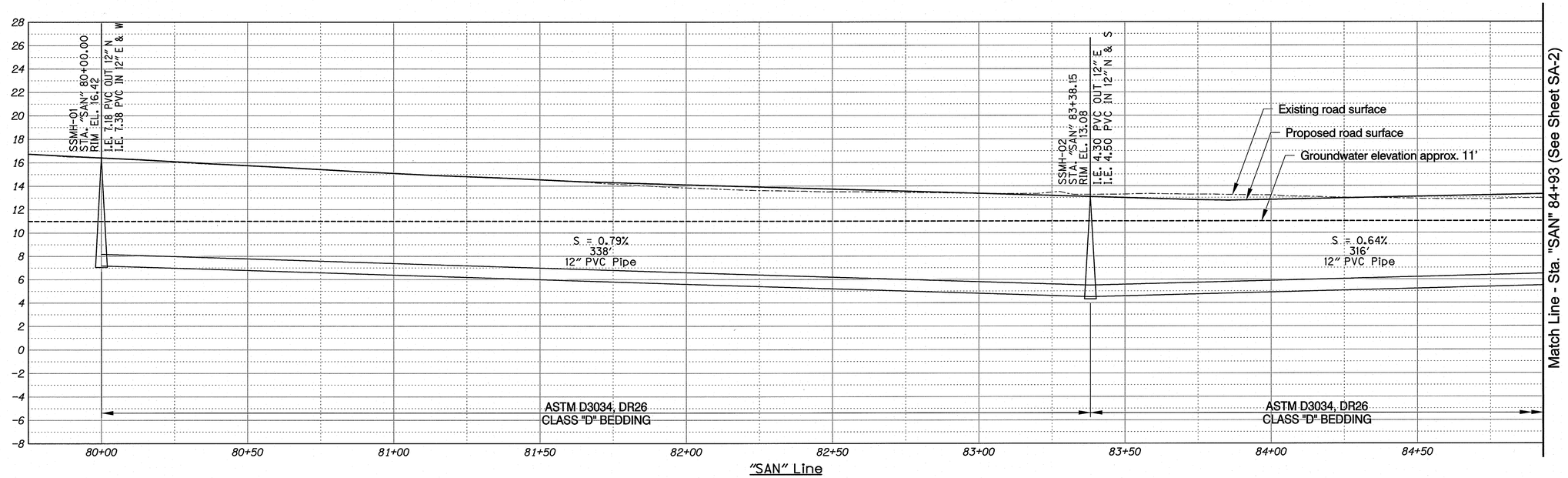

Profile

Scale: 1" = 5' Vert.
1" = 20' Horiz.

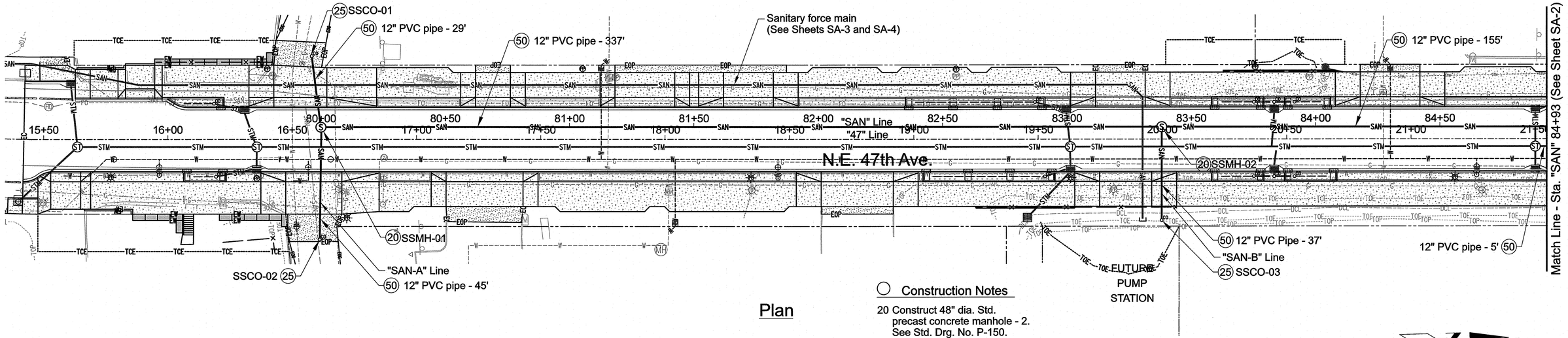

Plan

Construction Notes

20 Construct 48" dia. Std. precast concrete manhole - 2. See Std. Drg. No. P-150.

25 Install Terminal Cleanout - 3. See Detail "A"on Sht. SA-4.

50 Install 12" PVC pipe - 603. See Detail "D" on Sht. SA-4.

0 20 40 60 80
FEET

NO.	DATE	DESCRIPTION	APPD.
		REVISION	

DESIGNED BY R. Corti	DATE APPROVED April 2019
CAD BY C. Shearer	PROGRAM MGR. J. Dvorak
CHECKED BY D. Nunamaker	CONSTR. MGR. L. Moorhead
DESIGN MGR. M. Gualotunia	

REGISTERED PROFESSIONAL ENGINEER 77531 OREGON MARCH 14, 2006 MELANIE GUALOTUNIA
Expires 6/30/19

APPROVAL:

CHIEF ENGINEER — REG. PROF. ENGR. NO. 16301PE — 5/20/19

CITY OF PORTLAND, OREGON
BUREAU OF ENVIRONMENTAL SERVICES
NICK FISH — COMMISSIONER
WILLIAM F. RYAN, P.E. — CHIEF ENGINEER

N.E. 47th Ave: N.E. Columbia Blvd. - N.E. Cornfoot Rd.

Sanitary Gravity Main Plan & Profile

1/4 SECTION 2841,2842 2941,2942
PROJECT NO. PBOT T00539 BES E10877
SHEET NO. SA-1

Plot Date: 5/8/2019 10:58:08 AM Filename: \\pdotnt\grp&cds_LDesign\T00539 - NE 47th Ave LID - Columbia Blvd - Cornfoot Rd\CAD\PLAN_SHEETS\SHT SA-01SANITARY PLAN & PROFILE\PLOT_SHT_SA-01.dgn

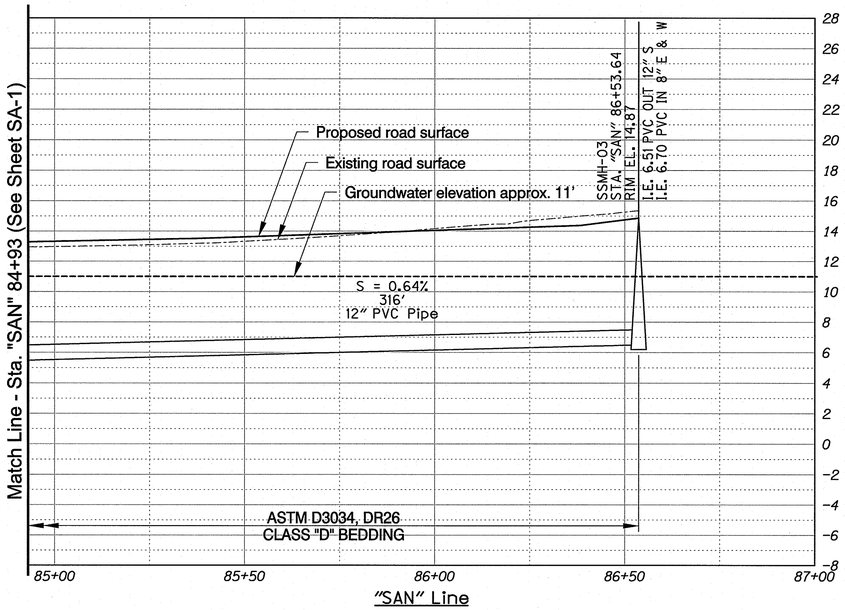

Profile

Scale: 1" = 5' Vert.
1" = 20' Horiz.

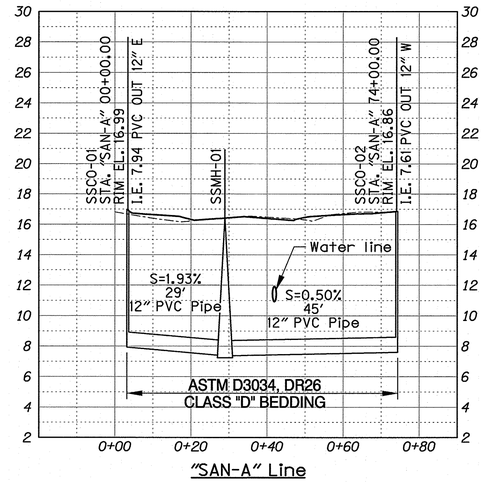

Profile

Scale: 1" = 5' Vert.
1" = 20' Horiz.

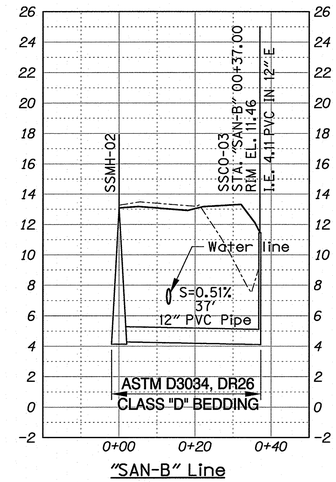

Profile

Scale: 1" = 5' Vert.
1" = 20' Horiz.

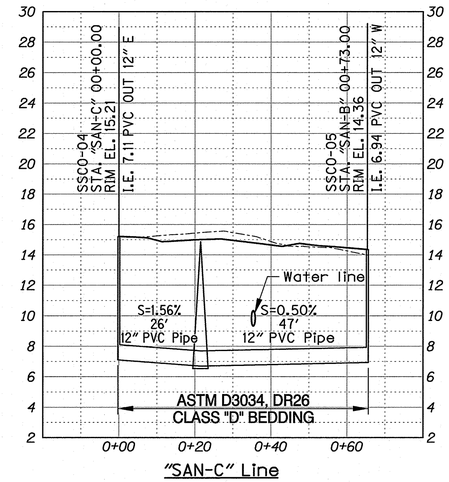

Profile

Scale: 1" = 5' Vert.
1" = 20' Horiz.

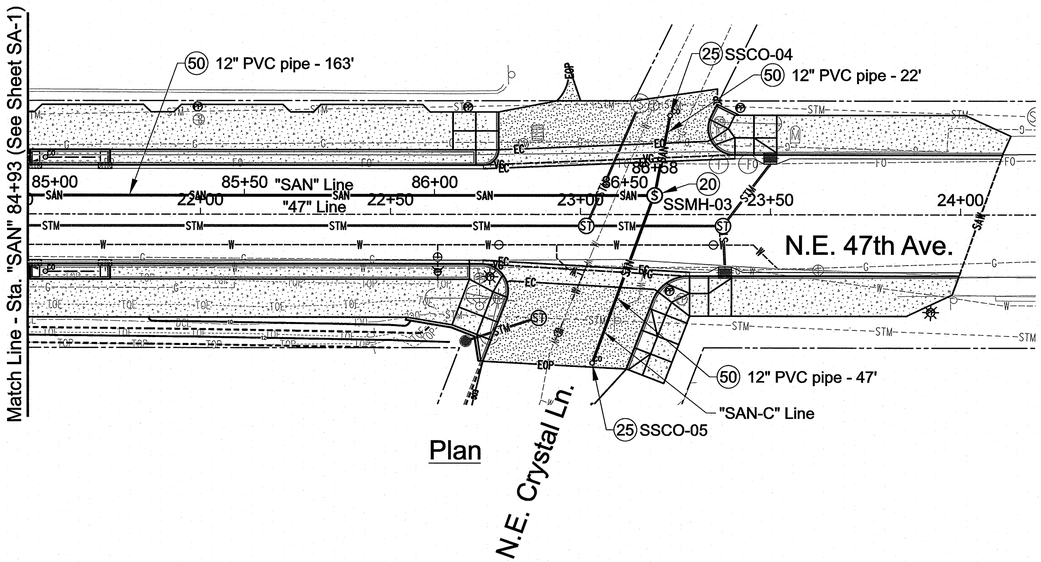

Plan

Construction Notes

20 Construct 48" dia. Std. precast concrete manhole - 1. See Std. Drg. No. P-150.

25 Install Terminal Cleanout - 2. See Detail "A"on Sht. SA-4.

50 Install 12" PVC pipe - 232'. See Detail "D" on Sht. SA-4.

0 20 40 60 80
FEET

NO.	DATE	DESCRIPTION	APPD.

REVISION

DESIGNED BY R. Corti	DATE APPROVED April 2019
CAD BY C. Shearer	PROGRAM MGR. J. Dvorak
CHECKED BY D. Nunamaker	CONSTR. MGR. L. Moorhead
DESIGN MGR. M. Gualotunia	

REGISTERED PROFESSIONAL ENGINEER 77531 OREGON MARCH 14, 2006 MELANIE GUALOTUNIA
Expires 6/30/19

APPROVAL:
CHIEF ENGINEER — REG. PROF. ENGR. NO. 16301PE — 5/20/19

CITY OF PORTLAND, OREGON
BUREAU OF ENVIRONMENTAL SERVICES
NICK FISH — COMMISSIONER
WILLIAM F. RYAN, P.E. — CHIEF ENGINEER

N.E. 47th Ave: N.E. Columbia Blvd. - N.E. Cornfoot Rd.

Sanitary Gravity Main Plan & Profiles

T/4 SECTION 2841,2842 2941,2942
PROJECT NO. PBOT T00539 BES E10677
SHEET NO. SA-2

Plot Date: 5/8/2019 12:07:30 PM Filename: \\pdotnt\grp$cds_IL Design\T00539 - NE 47th Ave LID - Columbia Blvd - Cornfoot Rd\CAD\PLAN_SHEETS\SHT SA-02 SANITARY PLAN & PROFILE\PLOT_SHT_SA-02.dgn

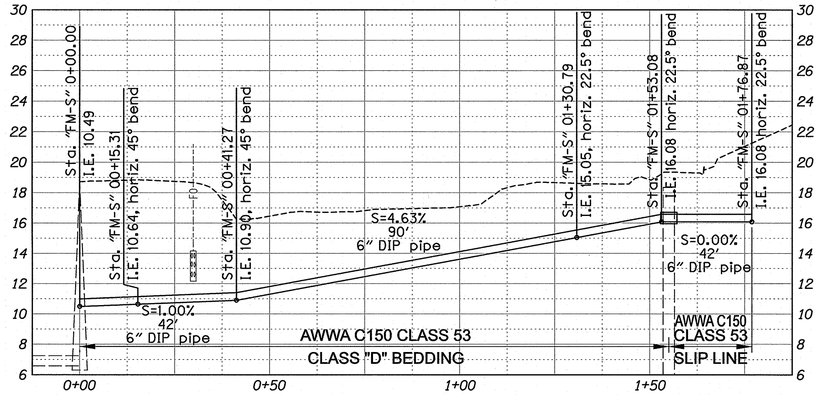

"FM-S" Line

Profile

Scale: 1" = 5' Vert.
1" = 20' Horiz.

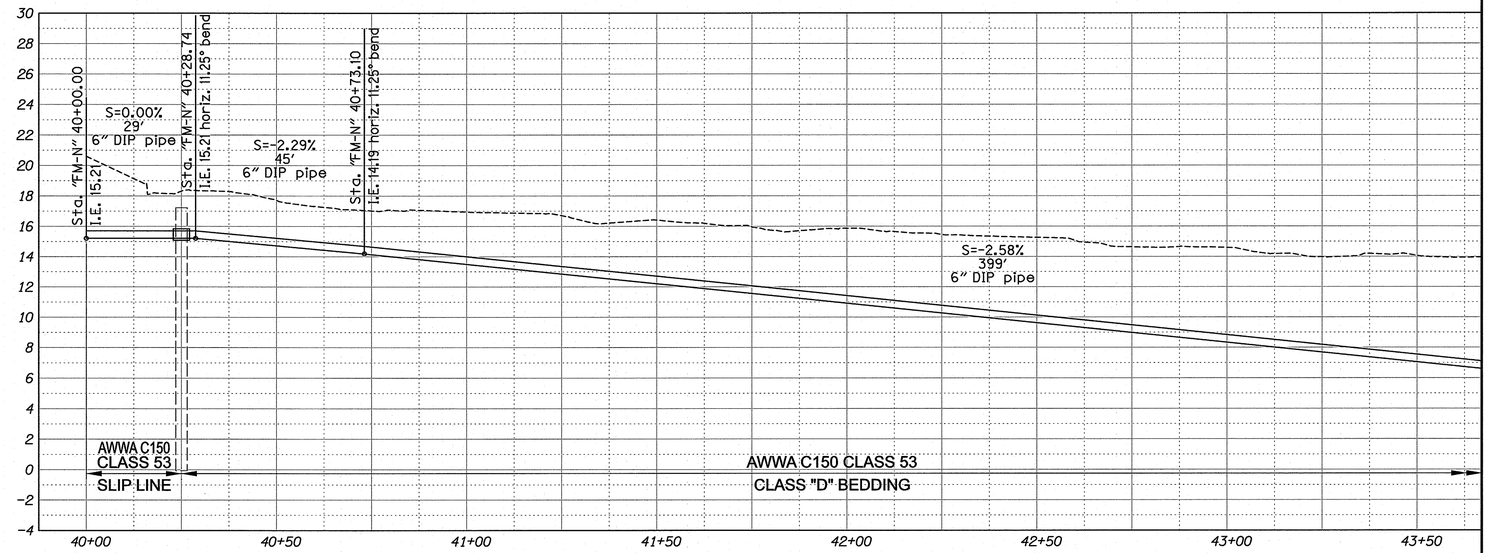

"FM-N" Line

Profile

Scale: 1" = 5' Vert.
1" = 20' Horiz.

Match Line - Sta. "FM-N" 43+67 (See Sheet SA-4)

Notes:
1. Contractor to pothole ends of existing 14" HDPE. Report findings to owner's rep.
2. Minimum 3' depth of cover.
3. Mechanically restrain all DI fittings and DI pipe joints within HDPE casing.

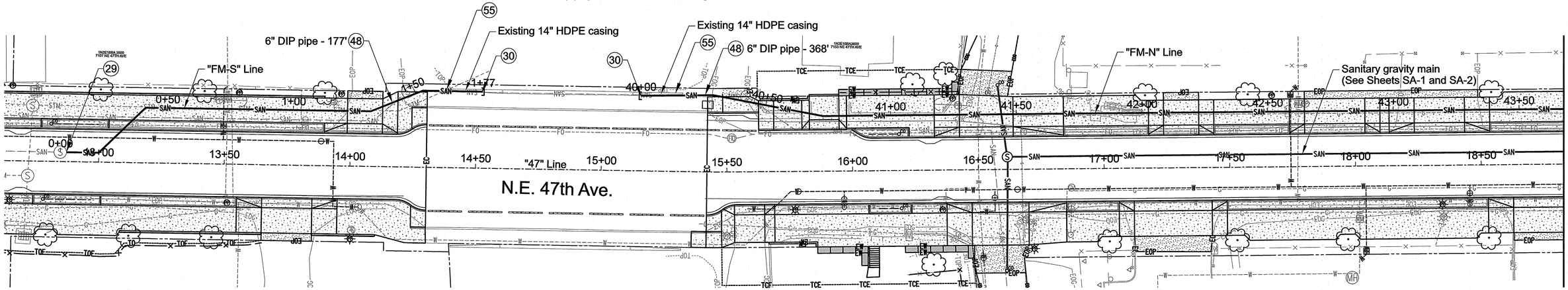

Match Line - Sta. "FM-N" 43+67 (See Sheet SA-4)

Plan

Construction Notes

29 Connect to existing manhole APB336.
See Detail "C" on Sht. SA-4.

30 Slip line 6" DI in existing 14" HDPE casing.
See Detail "B" on Sht. SA-4.

48 Install 6" Ductile Iron pipe - 545'.
See Detail "D" on Sht. SA-4.

0 20 40 60 80
FEET

NO.	DATE	DESCRIPTION	APPD.
		REVISION	

DESIGNED BY R. Corti	DATE APPROVED April 2019
CAD BY C. Shearer	PROGRAM MGR. J. Dvorak
CHECKED BY D. Nunamaker	CONSTR. MGR. L. Moorhead
DESIGN MGR. M. Gualotunia	

REGISTERED PROFESSIONAL ENGINEER 77531 OREGON MARCH 14, 2006 MELANIE GUALOTUNIA
Expires 6/30/19

APPROVAL:
CHIEF ENGINEER — REG. PROF. ENGR. NO. 16301PE — 5/20/19

CITY OF PORTLAND, OREGON
BUREAU OF ENVIRONMENTAL SERVICES
NICK FISH — COMMISSIONER
WILLIAM F. RYAN, P.E. — CHIEF ENGINEER

N.E. 47th Ave: N.E. Columbia Blvd. - N.E. Cornfoot Rd.

Sanitary Force Main Plan & Profile

1/4 SECTION 2841,2842 2941,2942
PROJECT NO. PBOT T00539 BES E10877
SHEET NO. SA-3

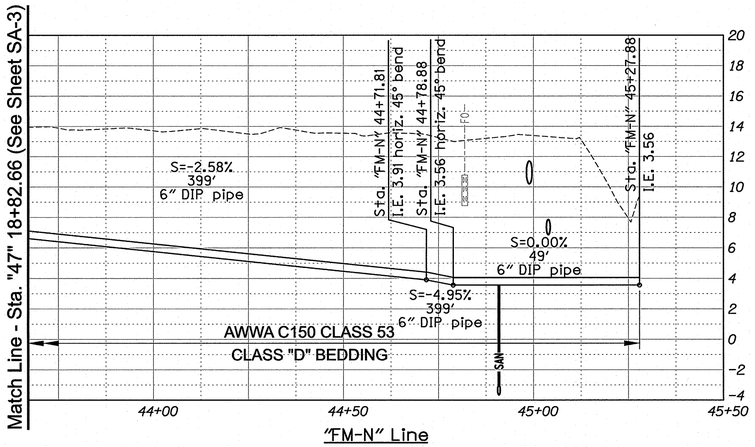

Profile

Scale: 1" = 5' Vert.
1" = 20' Horiz.

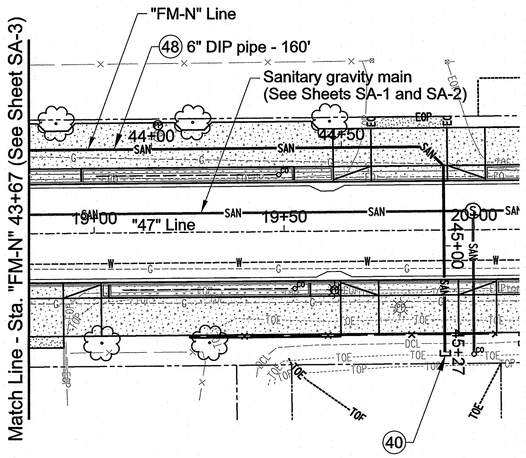

Construction Notes

40 Install mechanical joint cap with 2 x 4 marker.

48 Install 6" Ductile Iron pipe - 160.

0 20 40 60 80
FEET

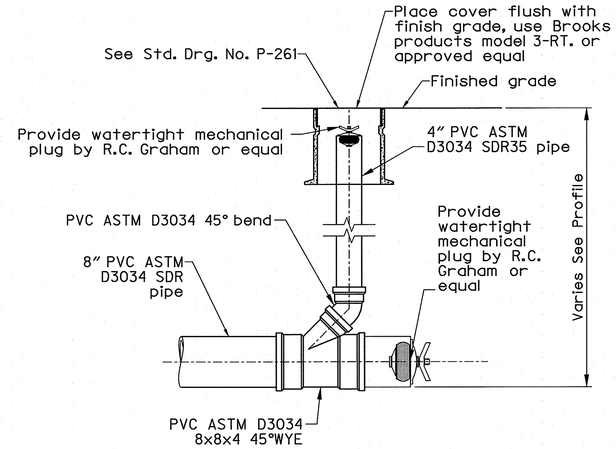

Sanitary Mainline Terminal Cleanout (A / SA-1)

Scale: 1" = 1'

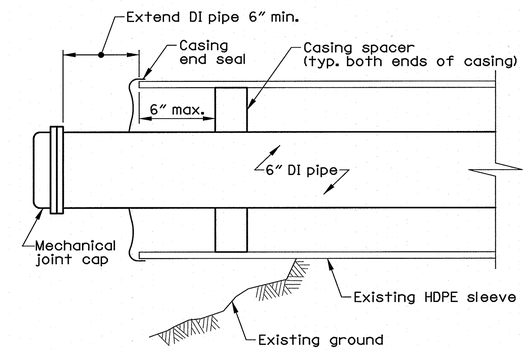

Section

Notes:
1. Install spacer 2' min. on both sides of joints.
2. Install additional spacers per manufacturers recommendation.

Ductile Iron Pipe Termination at Bridge Abutments (B / SA-1, SA-2)

Not to Scale

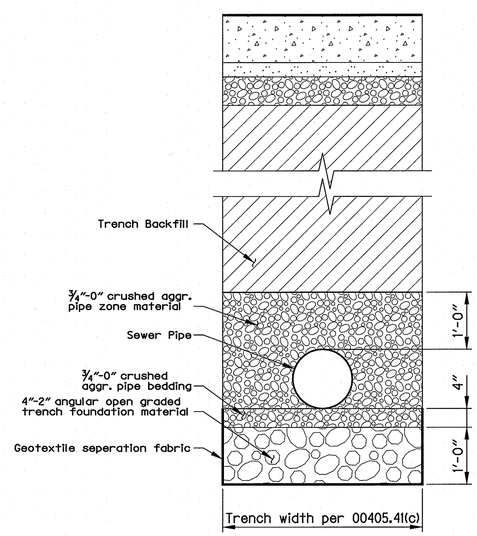

Modified Trench Detail (D / SA-1 thru SA-3)

Scale: ¾" = 1'

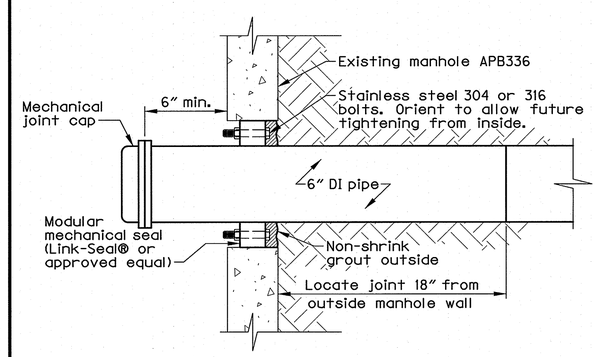

Section

Ductile Iron Pipe Termination at MH APB336 (C / SA-3)

Not to Scale

NO.	DATE	DESCRIPTION	APPD.

REVISION

DESIGNED BY R. Corti	DATE APPROVED April 2019
CAD BY C. Shearer	PROGRAM MGR. J. Dvorak
CHECKED BY D. Nunamaker	CONSTR. MGR. L. Moorhead
DESIGN MGR. M. Gualotunia	

REGISTERED PROFESSIONAL ENGINEER 77531 OREGON MARCH 14, 2006 MELANIE GUALOTUNIA
Expires 6/30/19

APPROVAL:

CHIEF ENGINEER — REG. PROF. ENGR. NO. 16301PE — 5/20/19

CITY OF PORTLAND, OREGON
BUREAU OF ENVIRONMENTAL SERVICES
NICK FISH — COMMISSIONER
WILLIAM F. RYAN, P.E. — CHIEF ENGINEER

N.E. 47th Ave: N.E. Columbia Blvd. - N.E. Cornfoot Rd.

Sanitary Force Main Plan, Profile & Details

1/4 SECTION 2841,2842 2941,2942
PROJECT NO. PBOT T00539 BES E10877
SHEET NO. SA-4

Plot Date: 5/8/2019 10:59:38 AM Filename: \\pdotnt\grp$cds_ll_Design\T00539 - NE 47th Ave LID - Columbia Blvd - Cornfoot Rd\CAD\PLAN_SHEETS\SHT SA-04 SANITARY FORCE MAIN PLAN & PROFILE\PLOT_SHT_SA-04.dgn

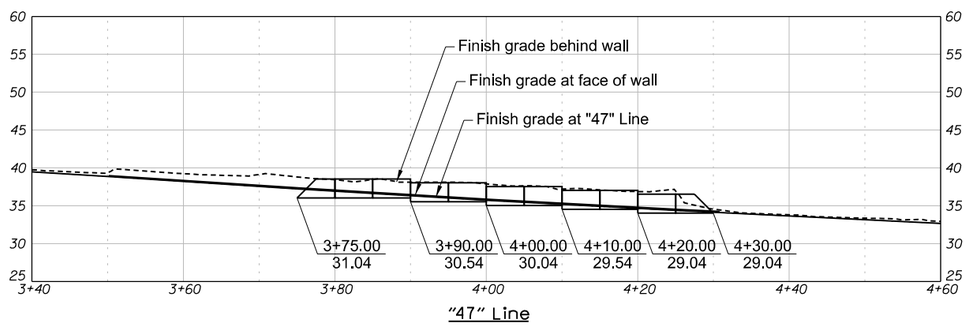

Wall 1 Profile

Scale: 1" = 10'

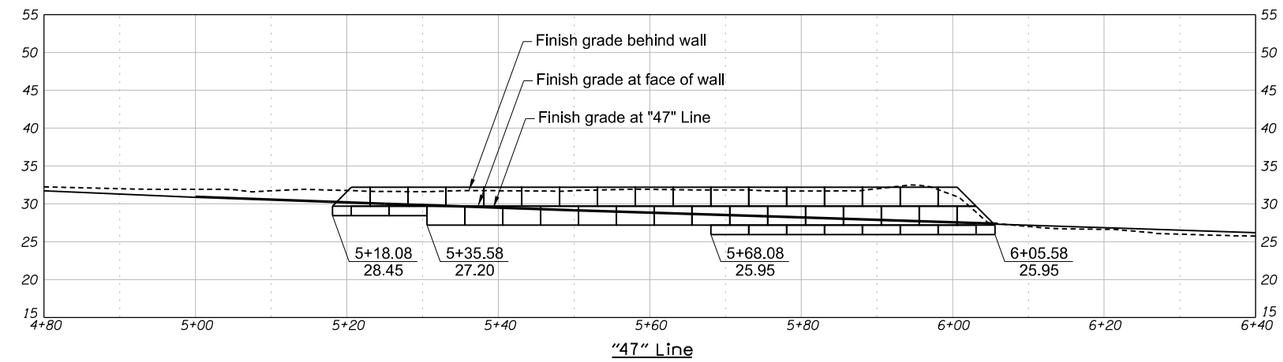

Wall 2 Profile

Scale: 1" = 10'

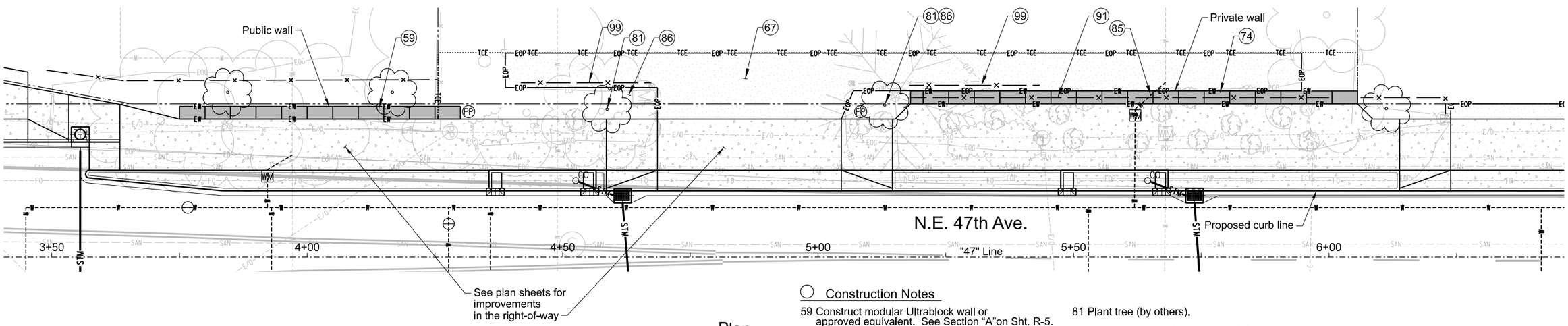

Plan

Construction Notes

59 Construct modular Ultrablock wall or approved equivalent. See Section "A"on Sht. R-5.

67 Construct asphalt driveway connection 6" nom. thickness, ½"dense MHMAC over 6" aggregate base. Match existing asphalt if thicker.

74 Construct modular Ultrablock wall. See Section "B" on Sht. R-5.

81 Plant tree (by others).

85 Sleeve water service under retaining wall.

86 Install bark mulch - 4" thick.

91 Install Type 'C' Protective Fencing. See Std. Drg. Nos. BR240, BR241, and BR242.

0 10 20 30 40
FEET

NO.	DATE	DESCRIPTION	APPD.

REVISION

DESIGNED BY N. Blanchard | DATE APPROVED May 2019
CAD BY C. Shearer | DIV. ENGINEER S. Townsen
CHECKED BY K. Roske

REGISTERED PROFESSIONAL ENGINEER 63222PE OREGON JULY 9, 2001 NICOLE OTT BLANCHARD
X Digital Signature
Expires 12/31/2019

APPROVALS:
SUPERVISING ENGINEER — REG. PROF. ENGR. NO. 84470PE
CITY ENGINEER — REG. PROF. ENGR. NO. 51538PE

PBOT
PORTLAND BUREAU OF TRANSPORTATION
DAN SALTZMAN — COMMISSIONER
STEVE TOWNSEN, P.E. — CITY ENGINEER

CITY OF PORTLAND, OREGON 1851

N.E. 47th Ave: N.E. Columbia Blvd. - N.E. Cornfoot Rd.

Retaining Walls 1 & 2 Plan and Profile

T/4 SECTION 2841,2842 2941,2942
PROJECT NO. PBOT T00539 BES E10853
SHEET NO. R-1

Plot Date: 5/16/2019 3:10:14 PM Filename: S:_ll_Design\T00539 - NE 47th Ave LID - Columbia Blvd - Cornfoot Rd\CAD\PLAN_SHEETS\SHT R-01RETAINING WALL PLAN AND PROFILE\PLOT_SHT_R-01.dgn

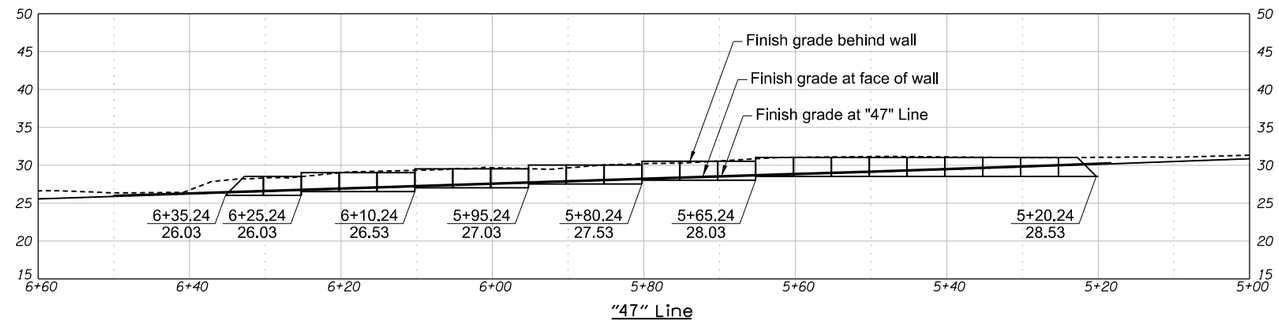

Wall 3 Profile

Scale: 1" = 10'

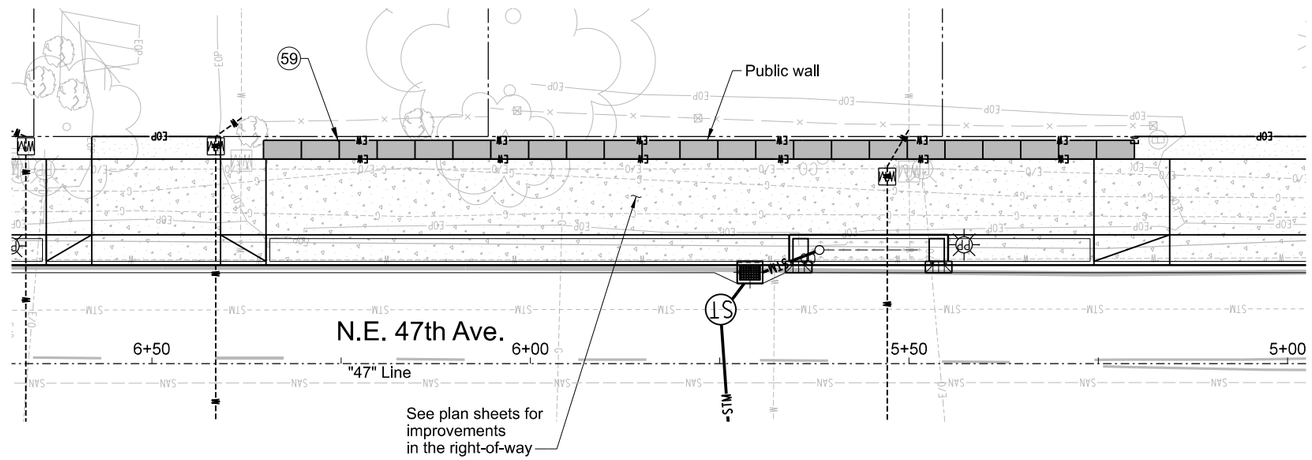

Plan

Construction Notes

59 Construct modular Ultrablock wall or approved equivalent. See Section "A"on Sht. R-5.

0 10 20 30 40
FEET

NO.	DATE	DESCRIPTION	APPD.

REVISION

DESIGNED BY N. Blanchard | DATE APPROVED May 2019
CAD BY C. Shearer | DIV. ENGINEER S. Townsen
CHECKED BY K. Roske

REGISTERED PROFESSIONAL ENGINEER 63222PE OREGON JULY 9, 2001 NICOLE OTT BLANCHARD
X Digital Signature
Expires 12/31/2019

APPROVALS:
SUPERVISING ENGINEER — REG. PROF. ENGR. NO. 84470PE
CITY ENGINEER — REG. PROF. ENGR. NO. 51538PE

PBOT
PORTLAND BUREAU OF TRANSPORTATION
DAN SALTZMAN — COMMISSIONER
STEVE TOWNSEN, P.E. — CITY ENGINEER

CITY OF PORTLAND OREGON 1851

N.E. 47th Ave: N.E. Columbia Blvd. - N.E. Cornfoot Rd.

Retaining Wall 3 Plan and Profile

1/4 SECTION 2841,2842 2941,2942
PROJECT NO. PBOT T00539 BES E10853
SHEET NO. R-2

Plot Date: 5/16/2019 3:03:16 PM Filename: S:_IL_Design\T00539 - NE 47th Ave LID - Columbia Blvd - Cornfoot Rd\CAD\PLAN_SHEETS\SHT R-02 RETAINING WALL PLAN AND PROFILE\PLOT_SHT_R-02.dgn

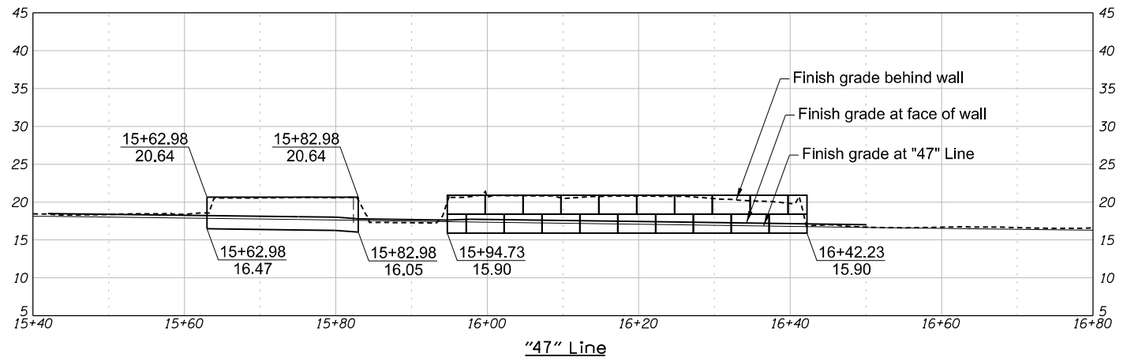

Wall 4 Profile

Scale: 1" = 10'

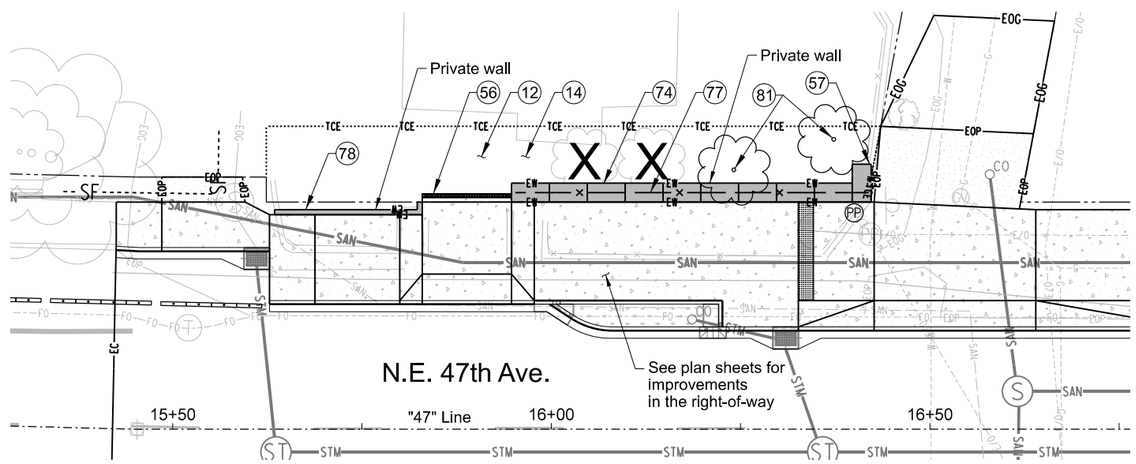

Plan

Construction Notes

12 Protect existing structure.

14 Remove sidewalk. Coordinate with adjacent property owner.

56 Install trench drain. See Sht. D-5.

57 Reconstruct existing wall to match into new wall.

74 Construct modular Ultrablock wall or approved equivalent. See Section "B" on Sht. R-5.

77 Install Type CL-4 chain link fence. See Std. Drg. No. RD815.

78 Construct cantilever retaining wall, cast-in-place concrete. See Section "A" on Sht. R-6.

81 Plant tree (by others).

0 10 20 30 40
FEET

NO.	DATE	DESCRIPTION	APPD.

REVISION

DESIGNED BY N. Blanchard
CAD BY C. Shearer
CHECKED BY K. Roske
DATE APPROVED May 2019
DIV. ENGINEER S. Townsen

X REGISTERED PROFESSIONAL ENGINEER 63222PE OREGON JULY 9, 2001 NICOLE OTT BLANCHARD
Digital Signature
Expires 12/31/2019

APPROVALS:
SUPERVISING ENGINEER — REG. PROF. ENGR. NO. 84470PE
CITY ENGINEER — REG. PROF. ENGR. NO. 51538PE

PBOT
PORTLAND BUREAU OF TRANSPORTATION
DAN SALTZMAN — COMMISSIONER
STEVE TOWNSEN, P.E. — CITY ENGINEER

CITY OF PORTLAND, OREGON 1851

N.E. 47th Ave: N.E. Columbia Blvd. - N.E. Cornfoot Rd.

Retaining Wall 4 Plan and Profile

1/4 SECTION 2841,2842 2941,2942
PROJECT NO. PBOT T00539 BES E10853
SHEET NO. R-3

Plot Date: 5/16/2019 3:03:16 PM Filename: S:_ll_Design\T00539 - NE 47th Ave LID - Columbia Blvd - Cornfoot Rd\CAD\PLAN_SHEETS\SHT R-03 RETAINING WALL PLAN AND PROFILE\PLOT_SHT_R-03.dgn

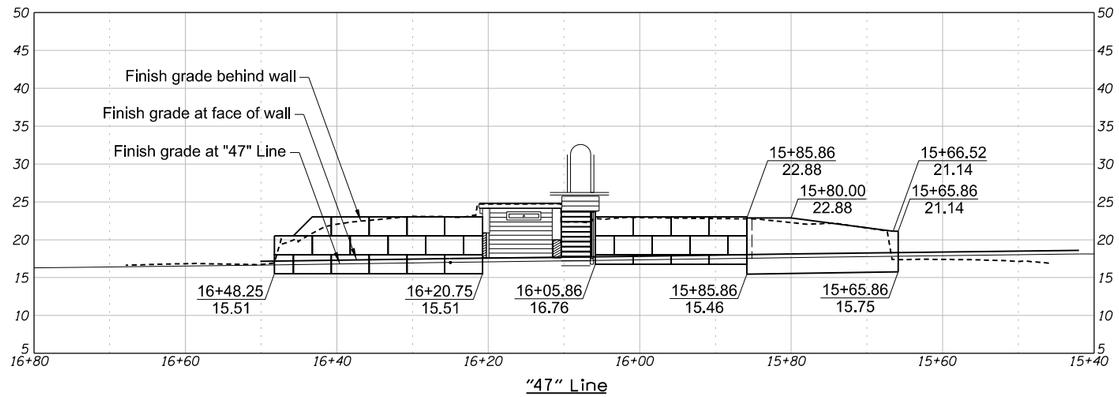

Wall 5 Profile

Scale: 1" = 10'

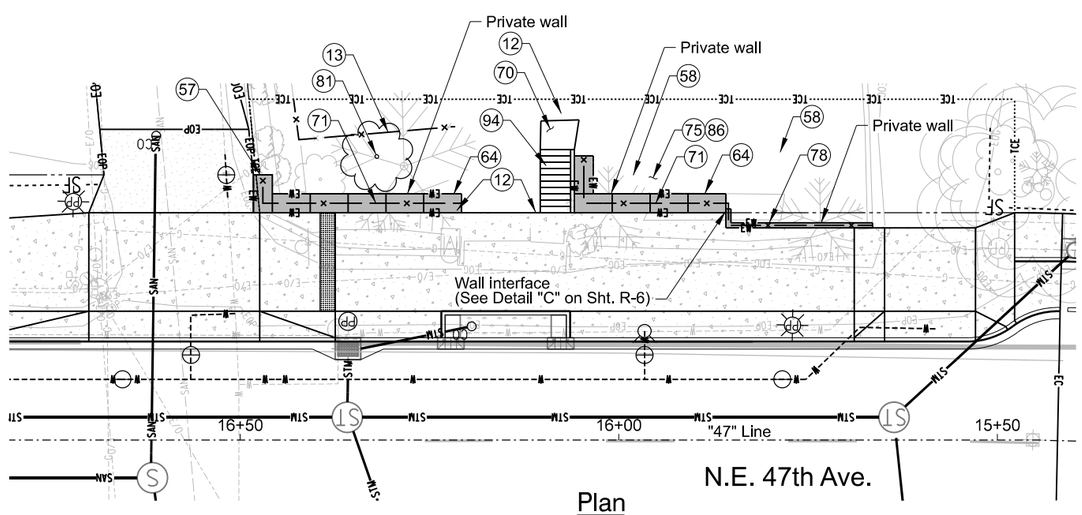

Plan

Construction Notes

12 Protect existing structure.

13 Remove and reconstruct existing cedar fence as necessary. Coordinate with adjacent property owner.

57 Reconstruct existing wall to match into new wall.

58 Connect existing roof drains into approved outlet.

64 Construct modular Ultrablock wall or approved equivalent. See Section "C"on Sht. R-5.

70 Construct sidewalk, 6"thick See Typical Sections and Std. Drg. No. P-551.

71 Install Type CL-4 vinyl clad chain link fence. See Std. Drg. No. RD815.

75 Replace plants/groundcover in kind within grading limits.

78 Construct cantilever retaining wall, cast-in-place concrete. See Section "B" on Sht. R-6.

81 Plant tree (by others).

86 Install bark mulch - 4" thick.

94 Construct stairs with pedestrian handrail. See Std. Drg. Nos. RD120, RD770 and RD771.

0 10 20 30 40
FEET

NO.	DATE	DESCRIPTION	APPD.

REVISION

DESIGNED BY N. Blanchard | DATE APPROVED May 2019
CAD BY C. Shearer | DIV. ENGINEER S. Townsen
CHECKED BY K. Roske

X REGISTERED PROFESSIONAL ENGINEER 63222PE OREGON JULY 9, 2001 NICOLE OTT BLANCHARD
Digital Signature
Expires 12/31/2019

APPROVALS:
SUPERVISING ENGINEER — REG. PROF. ENGR. NO. 84470PE
CITY ENGINEER — REG. PROF. ENGR. NO. 51538PE

PBOT
PORTLAND BUREAU OF TRANSPORTATION
DAN SALTZMAN — COMMISSIONER
STEVE TOWNSEN, P.E. — CITY ENGINEER

CITY OF PORTLAND OREGON 1851

N.E. 47th Ave: N.E. Columbia Blvd. - N.E. Cornfoot Rd.

Retaining Wall 5 Plan and Profile

1/4 SECTION 2841,2842 2941,2942
PROJECT NO. PBOT T00539 BES E10853
SHEET NO. R-4

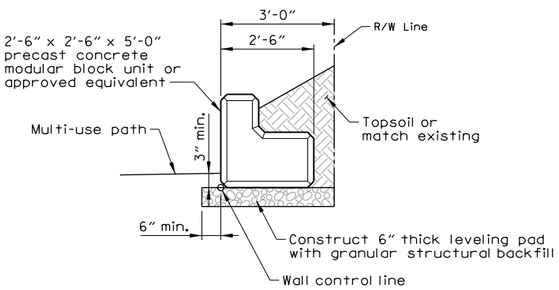

Modular Gravity Retaining Wall Section A (R-2)
Scale: ½" = 1'-0"

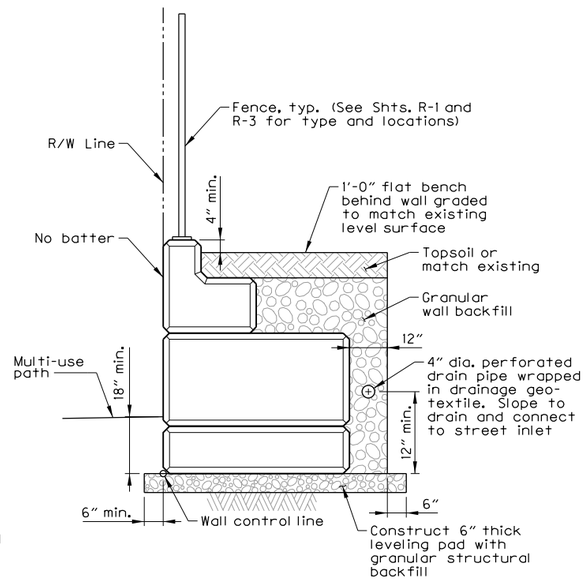

Modular Gravity Retaining Wall Section B (R-1, R-3)
Scale: ½" = 1'-0"

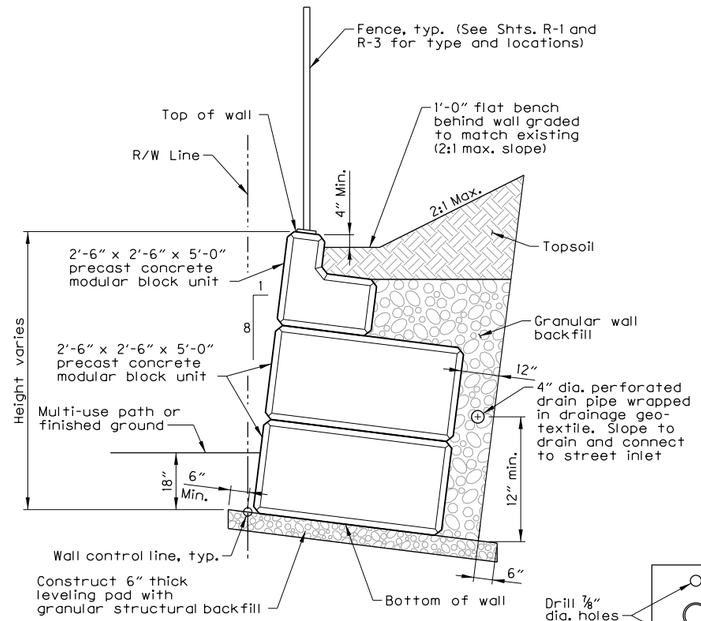

Modular Gravity Retaining Wall Section C (R-4)
Scale: ½" = 1'-0"

Fence Notes:

1. All fence posts shall be installed plumb in the longitudinal direction and plumb in transverse direction.
2. All steel plates and shapes shall conform to ASTM Specification A709 Grade 36.
3. Unless noted otherwise, concrete anchors shall be A307 ¾" diameter resin bonded anchors with a minimum pullout strength of 18,000 lbs. Anchors shall be installed according to manufacturer's instructions. Anchor embedment shall be such that the required strength is achieved, but not less than 6".

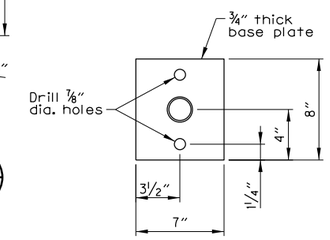

Base Plate Plan, Typ.

Retaining Wall General Notes:

1. All exposed blocks shall have Quarrystone Face finish or approved equivalent.
2. Wall design provides minimum factor of safety of 1.5 against sliding and 2.0 against overturning. Assumed friction factor between base of wall and leveling pad is 0.493.
3. Design Parameters:
   Backfill/embankment soil unit weight = 115 lbs./ft.
   Angle of internal friction of backfill/embankment soil = 29°
   Live load surcharge = 250 psf
4. Excavate to the bottom of leveling pad and make excavation available for inspection by the geotechnical engineer. Where directed, over excavate and construct granular structure bearing pad to the depth specified by the engineer.

H=2'-6"
560 PSF

Assembly Details

Modular Gravity Retaining Wall Section A

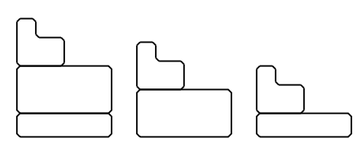

H=6'-3" 1835 PSF
H=5'-0" 1301 PSF
H=3'-9" 874 PSF

Assembly Details

Modular Gravity Retaining Wall Section B

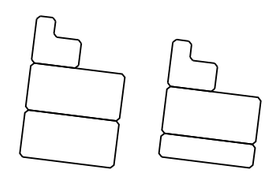

H=7'-6" 2002 PSF
H=6'-3" 1434 PSF

Assembly Details

Modular Gravity Retaining Wall Section C

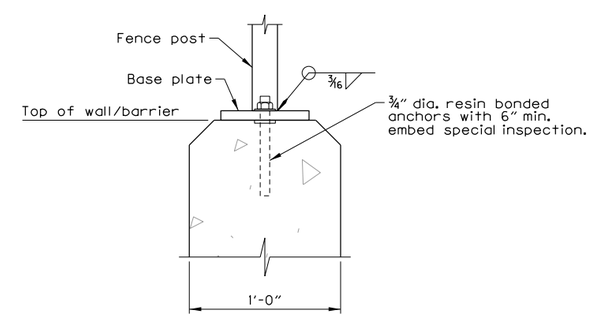

Base Plate Section

Fence Mount Retaining Wall (D)
Scale: 2" = 1'-0"

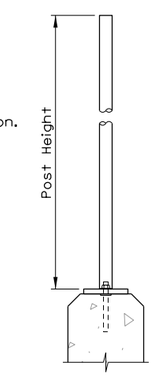

Fence Section (E)
Scale: 1" = 1'-0"

NO.	DATE	DESCRIPTION	APPD.

REVISION

DESIGNED BY F. Mangubat | DATE APPROVED May 2019
CAD BY C. Shearer | DIV. ENGINEER S. Townsen
CHECKED BY C. Glasgow

X REGISTERED PROFESSIONAL ENGINEER 80798PE OREGON June 11, 2008 JOHN CAMERON GLASGOW
Digital Signature
Expires 06/30/19

APPROVALS:
John Cameron Glasgow — SUPERVISING ENGINEER — REG. PROF. ENGR. NO. 80798PE
Steve Townsen — CITY ENGINEER — REG. PROF. ENGR. NO. 51538PE

PBOT PORTLAND BUREAU OF TRANSPORTATION
DAN SALTZMAN COMMISSIONER
STEVE TOWNSEN, P.E. CITY ENGINEER

CITY OF PORTLAND OREGON 1851

N.E. 47th Ave: N.E. Columbia Blvd. - N.E. Cornfoot Rd.

Miscellaneous Structural Details

1/4 SECTION 2841,2842 2941,2942
PROJECT NO. PBOT T00539 BES E10853
SHEET NO. R-5

Plot Date: 5/16/2019 3:10:18 PM Filename: S:_IL Design\T00539 - NE 47th Ave LID - Columbia Blvd - Cornfoot Rd\CAD\PLAN_SHEETS\SHT R-05 MISC STRUCTURAL AND SLOPE DETAILS\PLOT_SHT_R-05.dgn

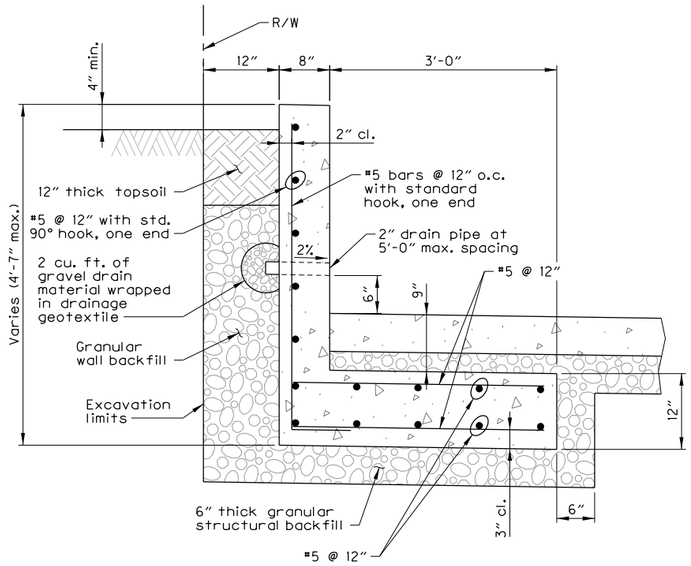

Cantilever Retaining Wall Section (A / R-3)

Scale: 1″ = 1′-0″

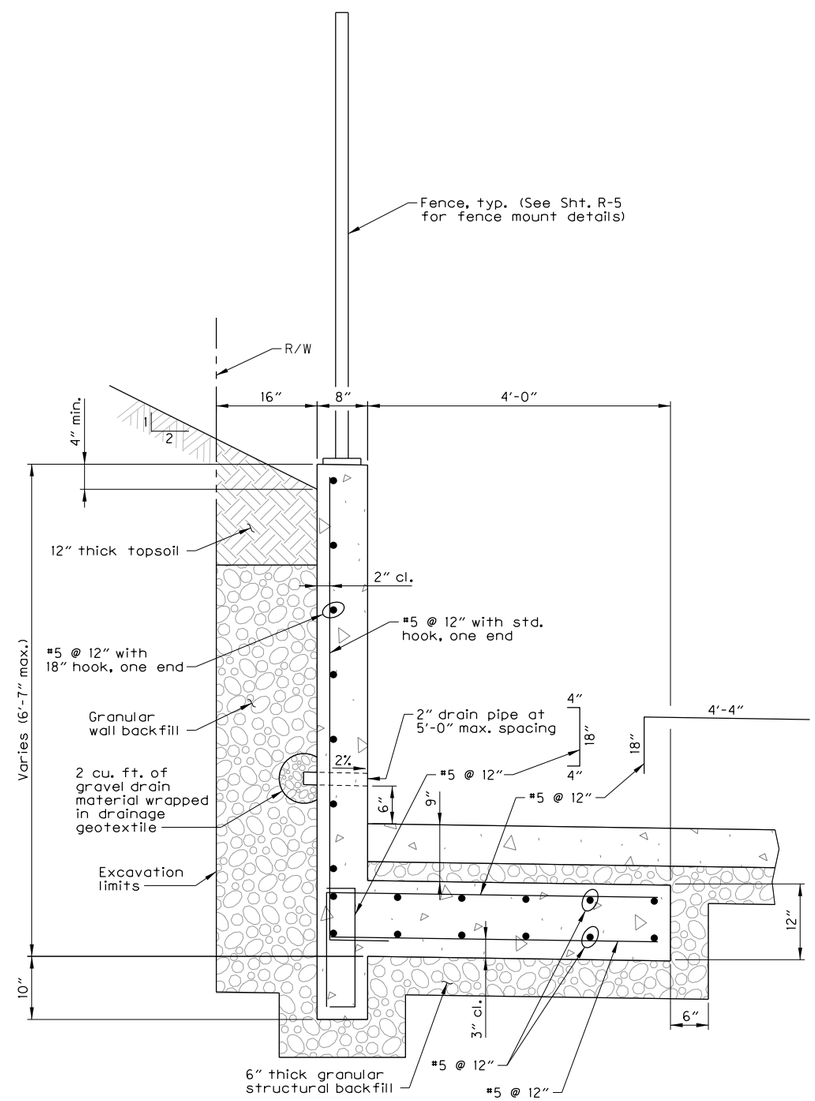

Cantilever Retaining Wall Section (B / R-4)

Scale: 1″ = 1′-0″

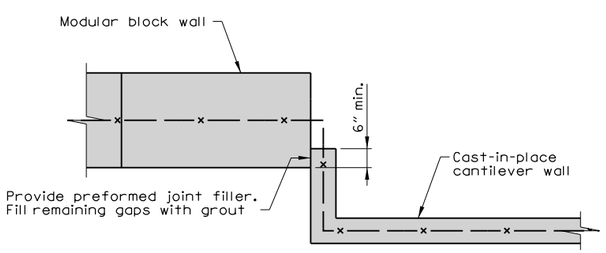

Plan

Wall Interface Detail (C / R-4)

Scale: ½″ = 1′-0″

Retaining Wall General Notes

1. Provide Class 4,000 psi - 1½", 1" or ¾" concrete.
2. Provide all reinforcing steel according to ASTM Specification A706 or ASTM A615 Grade 60.
3. Place bars 2" clear of the nearest face of concrete unless shown otherwise.
4. Wall design provides minimum factor of safety of 1.5 against sliding and 2.0 against overturning.
5. Design parameter: Backfill/embankment soil unit weight = 110 lbs./ft. Angle of internal friction of backfill/embakement soil is 30°. Live load surcharge=50 psf.
6. Make footing excavation available for inspection by the geotechnical engineer. Where directed, over-excavate and construct granular structural bearing pad to the depth specified by the engineer.

NO.	DATE	DESCRIPTION	APPD.

REVISION

DESIGNED BY F. Mangubat | DATE APPROVED May 2019
CAD BY C. Shearer | DIV. ENGINEER S. Townsen
CHECKED BY C. Glasgow

X REGISTERED PROFESSIONAL ENGINEER 80798PE OREGON June 11, 2008 JOHN CAMERON GLASGOW
Digital Signature
Expires 06/30/19

APPROVALS:
John Cameron Glasgow — SUPERVISING ENGINEER — REG. PROF. ENGR. NO. 80798PE
Steve Townsen — CITY ENGINEER — REG. PROF. ENGR. NO. 51538PE

PBOT PORTLAND BUREAU OF TRANSPORTATION
DAN SALTZMAN COMMISSIONER
STEVE TOWNSEN, P.E. CITY ENGINEER

CITY OF PORTLAND, OREGON 1851

N.E. 47th Ave: N.E. Columbia Blvd. - N.E. Cornfoot Rd.

Miscellaneous Structural Details

1/4 SECTION 2841,2842 2941,2942
PROJECT NO. PBOT T00539 BES E10853
SHEET NO. R-6

Plot Date: 5/16/2019 3:10:27 PM Filename: S:_II_Design\T00539 - NE 47th Ave LID - Columbia Blvd - Cornfoot Rd\CAD\PLAN_SHEETS\SHT R-06 MISC STRUCTURAL AND SLOPE DETAILS\PLOT_SHT_R-06.dgn

Bid Documents

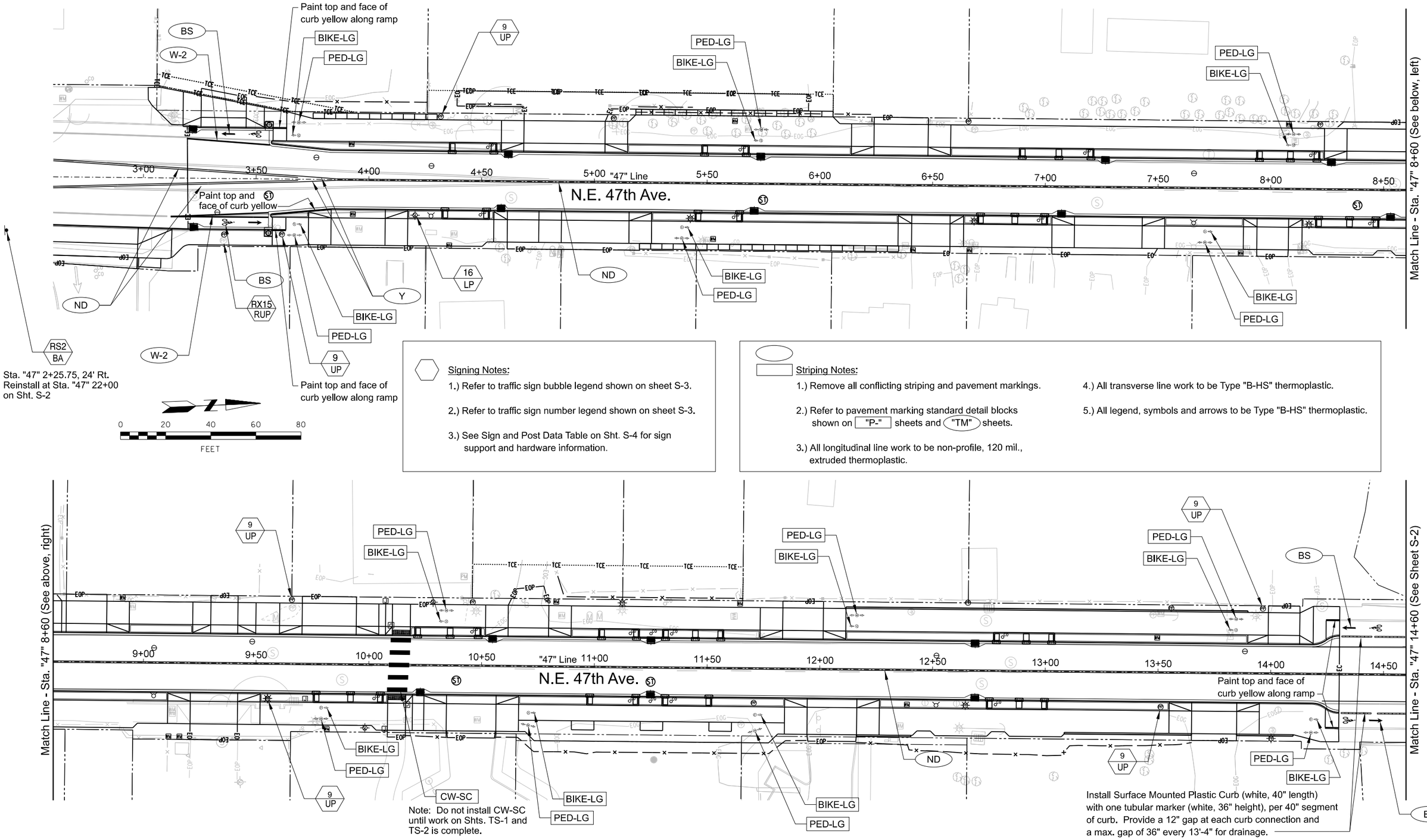

Signing Notes:

1.) Refer to traffic sign bubble legend shown on sheet S-3.

2.) Refer to traffic sign number legend shown on sheet S-3.

3.) See Sign and Post Data Table on Sht. S-4 for sign support and hardware information.

Striping Notes:

1.) Remove all conflicting striping and pavement markings.

2.) Refer to pavement marking standard detail blocks shown on "P-" sheets and "TM" sheets.

3.) All longitudinal line work to be non-profile, 120 mil., extruded thermoplastic.

4.) All transverse line work to be Type "B-HS" thermoplastic.

5.) All legend, symbols and arrows to be Type "B-HS" thermoplastic.

NO.	DATE	DESCRIPTION	APPD.
		REVISION	

DESIGNED BY M. Haines | DATE APPROVED May 2019
CAD BY C. Shearer
CHECKED BY M. Dellinger

REGISTERED PROFESSIONAL ENGINEER 16660PE OREGON JULY 20, 1993 JEANNE-MARIE JEFFREY
Digital Signature
Expires 6/30/19

APPROVALS:
Lewis Wardrip — CITY TRAFFIC ENGINEER — REG. PROF. ENGR. NO. 16399PE
Steve Townsen — CITY ENGINEER — REG. PROF. ENGR. NO. 51538PE

PBOT
PORTLAND BUREAU OF TRANSPORTATION
DAN SALTZMAN — COMMISSIONER
STEVE TOWNSEN, P.E. — CITY ENGINEER

CITY OF PORTLAND OREGON 1851

N.E. 47th Ave: N.E. Columbia Blvd. - N.E. Cornfoot Rd.

Permanent Signing and Striping Plan

1/4 SECTION 2841,2842 2941,2942
PROJECT NO. PBOT T00539 BES E10853
SHEET NO. S-1

Plot Date: 5/10/2019 1:14:27 PM Filename: S:_JL Design\T00539 - NE 47th Ave LID - Columbia Blvd - Cornfoot Rd\CAD\PLAN_SHEETS\SHT S-01PERMANENT SIGNING AND STRIPING PLAN\PLOT_SHT_S-01.dgn

Bid Documents

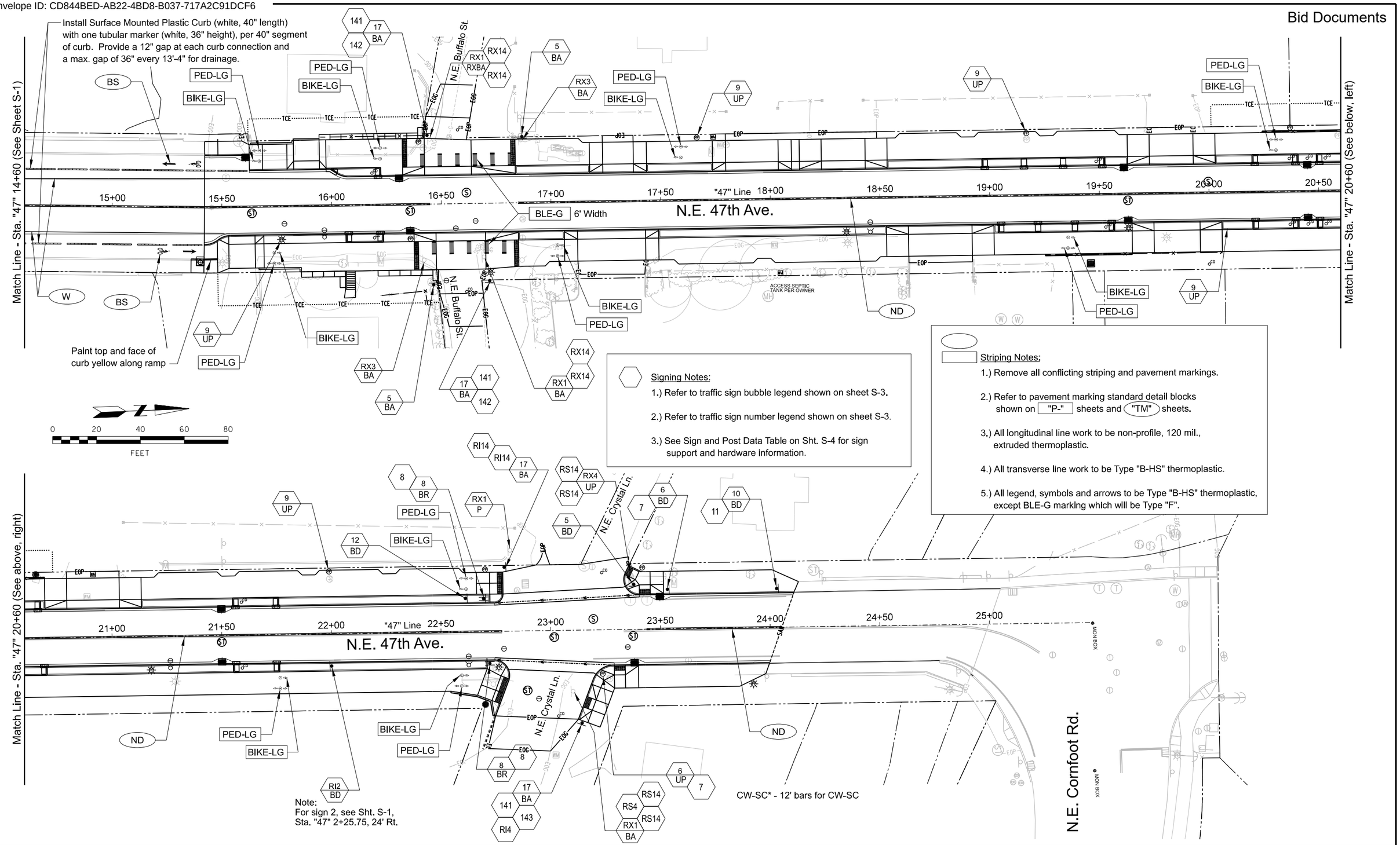

Signing Notes:

1.) Refer to traffic sign bubble legend shown on sheet S-3.

2.) Refer to traffic sign number legend shown on sheet S-3.

3.) See Sign and Post Data Table on Sht. S-4 for sign support and hardware information.

Striping Notes:

1.) Remove all conflicting striping and pavement markings.

2.) Refer to pavement marking standard detail blocks shown on "P-" sheets and "TM" sheets.

3.) All longitudinal line work to be non-profile, 120 mil., extruded thermoplastic.

4.) All transverse line work to be Type "B-HS" thermoplastic.

5.) All legend, symbols and arrows to be Type "B-HS" thermoplastic, except BLE-G marking which will be Type "F".

NO.	DATE	DESCRIPTION	APPD.
		REVISION	

DESIGNED BY M. Haines | DATE APPROVED May 2019
CAD BY C. Shearer
CHECKED BY M. Dellinger

REGISTERED PROFESSIONAL ENGINEER 16660PE OREGON JULY 20, 1993 JEANNE-MARIE JEFFREY
Digital Signature
Expires 6/30/19

APPROVALS:
Lewis Wardrip — CITY TRAFFIC ENGINEER — REG. PROF. ENGR. NO. 16399PE
Steve Townsen — CITY ENGINEER — REG. PROF. ENGR. NO. 51538PE

PBOT
PORTLAND BUREAU OF TRANSPORTATION
DAN SALTZMAN — COMMISSIONER
STEVE TOWNSEN, P.E. — CITY ENGINEER

CITY OF PORTLAND OREGON 1851

N.E. 47th Ave: N.E. Columbia Blvd. - N.E. Cornfoot Rd.

Permanent Signing and Striping Plan

1/4 SECTION 2841,2842 2941,2942
PROJECT NO. PBOT T00539 BES E10853
SHEET NO. S-2

Traffic Sign Bubble Legend

- N — Install new sign (N)
- N / M — Install new sign (N) on sign support (M)
- N / EXM — Install new sign (N) on existing sign support (M)
- RIN — Reinstall existing sign (N)
- RIN / M — Reinstall existing sign (N) on new sign support (M)
- RIN / RIM — Reinstall existing sign (N) and reinstall existing sign support (M)
- RXN — Remove existing sign(N)
- RXN / M — Remove existing sign(N) and sign support (M)
- RSN — Remove and save existing sign (N)
- RSN / M — Remove and save existing sign (N) and remove sign support (M)
- RXN / EXM — Remove existing sign (N) and maintain and protect existing sign support (M)
- RSN / EXM — Remove and save existing sign (N) and protect existing sign support (M)
- RSN / RSM — Remove and save existing sign (N) and remove and save existing sign support (M)
- RXM — Remove existing sign support (M)
- M — Install sign support (M) only
- EXN — Maintain and protect existing sign (N) and support

N = Sign Number. See "Traffic Signs" Legend for the numbers.

M = Material for Pole or Post

Material Options are:

BR = Bike Rack Support
BA = Breakaway Anchor
BD = Breakaway Dome
LP = Light Pole
P = Pipe Post
FP = Flexible Post
SP = Signal Pole
UP = Utility Pole
W = Wood Post

Traffic Sign Number Legend

Sign No. 1
R1010
R1-1
30x30

Sign No. 2
S3701
30x30

Sign No. 3
W3700
W14-1
24x24

Sign No. 4
W3710
W14-1
30x30

Sign No. 5
W3700
W14-1
24x24

Sign No. 6
W3210
W11-2
30x30

Sign No. 7
S1105
W13-7P
24x12

Sign No. 8
S2090
R9-3A
18x18

Sign No. 9
S3160
R9-7
12x18

Sign No. 10
S3001
D11-1A
18x18

Sign No. 11
S3360
M7-4
12x9

Sign No. 12
S3980R
24x18

Sign No. 13
S3701A
30x18

Sign No. 14
G5500
8xVaries

Sign No. 15
R2090
24x30

Sign No. 16
R2095
30x36

Sign No. 17
R1010
R1-1
30x30

Denotes Existing Sign

STREET NAME SIGN TABLE			
SIGN#	STREET NAME	BLOCK#	REMARKS
141	NE 47th Av	-	See Std. Drg. No. P-420
142	NE Buffalo St	7200	See Std. Drg. No. P-420
143	NE Crystal Ln	7400	See Std. Drg. No. P-420

Note:
For signs 141 thru 143, contractor must submit shop drawings in compliance with Std. Drg. No. P-420 to the PBOT traffic engineer prior to sign fabrication.

Plot Date: 5/10/2019 14:30 PM Filename: S:_IL_Design\T00539 - NE 47th Ave LID - Columbia Blvd - Cornfoot Rd\CAD\PLAN_SHEETS\SHT S-03 PERMANENT SIGNING LEGEND\PLOT_SHT_S-03.dgn

NO.	DATE	DESCRIPTION	APPD.

REVISION

DESIGNED BY M. Haines
DATE APPROVED May 2019
CAD BY C. Shearer
CHECKED BY M. Dellinger

X REGISTERED PROFESSIONAL ENGINEER 16660PE OREGON JULY 20, 1993 JEANNE-MARIE JEFFREY
Digital Signature
Expires 6/30/19

APPROVALS:
Lewis Wardrip — CITY TRAFFIC ENGINEER — REG. PROF. ENGR. NO. 16399PE
Steve Townsen — CITY ENGINEER — REG. PROF. ENGR. NO. 51538PE

PBOT PORTLAND BUREAU OF TRANSPORTATION
DAN SALTZMAN COMMISSIONER
STEVE TOWNSEN, P.E. CITY ENGINEER

CITY OF PORTLAND OREGON 1851

N.E. 47th Ave: N.E. Columbia Blvd. - N.E. Cornfoot Rd.

Permanent Signing Legends

1/4 SECTION 2841,2842 2941,2942
PROJECT NO. PBOT T00539 BES E10853
SHEET NO. S-3

SIGN AND POST DATA TABLE

SIGN NO.	SHEET NO.	STATIONING LINE	SIGN LOCATION 1/ (STA. & DIR.)	SIGN DIMENSION WIDTH (IN INCHES)	SIGN DIMENSION HEIGHT (IN INCHES)	SIGN CODE PBOT	SIGN CODE ODOT	SIGN CODE MUTCD	SIGN TYPE (PER SECS. 940 & 2910 COP STD. SPECS.)	SUB-STRATE ALUM. COMPOSITE	SUB-STRATE SHEET ALUM.	SUB-STRATE EXTRUDED ALUM.	SIGN NO.	TYPE OF SUPPORT – MOUNT: SINGLE PIPE POST	TWO PIPE POSTS	EXISTING PIPE POST	UTILITY POLE	LIGHT POLE	SIGNAL POLE	MAILBOX SUPPORT	TRIANGULAR BASE BREAKAWAY	SIGN BRIDGE	MODIFIED BIKE RACK	EXISTING MODIFIED BIKE RACK	CANTILEVER	HARDWARE: U BOLT SIGN BRACKETS	BACK TO BACK SIGN BRACKET	DOME POST CAP	EXTRUDED TRAFFIC SIGN BRACKETS	FLARED LEG BRACKETS	STRAIGHT LEG BRACKETS	BANDING AND BANDING CLIPS	STRONG-BACK CHANNELS	SING-E SNS POST CAP (6")	DOUBLE SNS CROSS PIECE (6")	SINGLE SNS POST CAP (12")	DOUBLE SNS CROSS PIECE (12")	HEX BOLTS, NYLOCK BOLTS & WASHERS	SNS CANTILEVER BRACKET	SNS CANTILEVER EXTENSION	POST SIZE IN INCHES (BASED ON ESTIMATED LENGTH)	POST LENGTH IN INCHES (MUST BE FIELD VERIFIED)	FOOTING TYPE BREAKAWAY DOME ASSEMBLY	FOOTING TYPE BREAKAWAY ANCHOR ASSEMBLY	FOOTING MIN. DEPTH 2/	REFER TO PBOT STD. DWG. P-400	P-405	P-406	P-407	P-410	P-411	P-412	P-413	P-420	REFER TO ODOT STD. DWG. TM602	TM675	TM680		REMARKS
2	S-2	"47" Line	22+00 RT	30	30	S3701			EXIST.		X		2	X														X	X												2	140	X			X		X	X	X											8ft mounting height over bike lane per P-400
4	S-2	"47" Line	23+14 RT	30	30	W3710			EXIST.		X		4																X																	X				X											same mount as sign 17
5	S-2	"47" Line	16+45 RT	24	24	W3710		W14-1	Y1		X		5	X														X	X												2	120		X		X	X		X															
5	S-2	"47" Line	16+85 LT	24	24	W3710		W14-1	Y1		X		5	X														X	X												2	120		X		X	X		X															
5	S-2	"47" Line	23+40 LT	24	24	W3710		W14-1	Y1		X		5	X														X	X												2	120	X			X		X		X														
6	S-2	"47" Line	23+53 LT	30	30	W3210		W11-2	Y1		X		6	X														X	X												2	140	X			X		X		X														
6	S-2	"47" Line	23+23 RT	30	30	W3210		W11-2	Y1		X		6				X														X	X	X												X					X												
7	S-2	"47" Line	23+53 LT	24	12	S1105		W13-7P	Y1		X		7																X																X																	same mount as sign 6
7	S-2	"47" Line	23+23 RT	24	12	S1105		W13-7P	Y1		X		7				X														X	X	X												X																
8	S-2	"47" Line	22+70 LT	18	18	S2090		R9-3A	W2		X		8										X														X							X																
8	S-2	"47" Line	22+70 LT	18	18	S2090		R9-3A	W2		X		8																								X							X																same mount as other sign 8
8	S-2	"47" Line	22+70 RT	18	18	S2090		R9-3A	W2		X		8										X														X							X																
8	S-2	"47" Line	22+70 RT	18	18	S2090		R9-3A	W2		X		8																								X							X																same mount as other sign 8
9	S-1	"47" Line	9+55 RT	12	18	S3160		R9-7	W1		X		9				X														X	X													X						X										8ft mounting height over bike lane per P-400
9	S-1	"47" Line	9+65 RT	12	18	S3160		R9-7	W1		X		9				X														X	X													X						X										
9	s-1	"47" Line	13+51 RT	12	18	S3160		R9-7	W1		X		9				X														X	X													X						X										8ft mounting height over bike lane per P-400
9	S-1	"47" Line	3+61 RT	12	18	S3160		R9-7	W1		X		9				X														X	X													X						X										8ft mounting height over bike lane per P-400
9	S-1	"47" Line	4+30 LT	12	18	S3160		R9-7	W1		X		9				X														X	X													X						X										
9	S-1	"47" Line	13+97 LT	12	18	S3160		R9-7	W1		X		9				X														X	X													X						X										
9	S-2	"47" Line	15+77 RT	12	18	S3160		R9-7	W1		X		9				X														X	X													X						X										8ft mounting height over bike lane per P-400
9	S-2	"47" Line	17+67 LT	12	18	S3160		R9-7	W1		X		9				X														X	X													X						X										
9	S-2	"47" Line	19+17 LT	12	18	S3160		R9-7	W1		X		9				X														X	X													X						X										
9	S-2	"47" Line	20+08 RT	12	18	S3160		R9-7	W1		X		9				X														X	X													X						X										8ft mounting height over bike lane per P-400
9	S-2	"47" Line	22+00 LT	12	18	S3160		R9-7	W1		X		9				X														X	X													X						X										
10	S-2	"47" Line	24+05 LT	18	18	S3001		D11-1A	G		X		10	X														X	X												2	104	X			X		X		X													
11	S-2	"47" Line	24+05 LT	12	9	S3360		M7-4	G		X		11																X																X				X												same mount as sign 10
12	S-2	"47" Line	22+65 LT	24	18	S3980R			G		X		12	X														X	X												2	116	X			X		X		X													8ft mounting height over bike lane per P-400
14	S-2	"47" Line	22+82 LT	VAR.	8	G5501			EXIST.		X		14																					X												X		X													same mount as sign 17
14	S-2	"47" Line	22+82 LT	VAR.	8	G5501			EXIST.		X		14																						X												X		X													same mount as sign 17
16	S-1	"47" Line	4+27 RT	30	36	R2095			W1		X		16						X											X		X	X													X															8ft mounting height over bike lane per P-400
17	S-2	"47" Line	16+45 LT	30	30	R1010		R1-1	R		X		17	X															X												2	116		X		X	X		X														
17	S-2	"47" Line	16+72 RT	30	30	R1010		R1-1	R		X		17	X															X												2	116		X		X	X		X														
17	S-2	"47" Line	22+82 LT	30	30	R1010		R1-1	R		X		17	X															X												2	116		X		X	X		X														
17	S-2	"47" Line	23+14 RT	30	30	R1010		R1-1	R		X		17	X														X	X												2	116		X		X	X		X														
141	S-2	"47" Line	16+45 LT	VAR.	8	G5501			G		X		141																					X												X		X													same mount as sign 17
141	S-2	"47" Line	16+72 RT	VAR.	8	G5501			G		X		141																					X												X		X													same mount as sign 17
141	S-2	"47" Line	23+14 RT	VAR.	8	G5501			G		X		141																					X												X		X													same mount as sign 17
142	S-2	"47" Line	16+45 LT	VAR.	8	G5501			G		X		142																						X												X		X													same mount as sign 17
142	S-2	"47" Line	16+72 RT	VAR.	8	G5501			G		X		142																						X												X		X													same mount as sign 17
143	S-2	"47" Line	23+14 RT	VAR.	8	G5501			G		X		143																						X												X		X													same mount as sign 17

1/ IF SIGN LOCATION IS IN CONFLICT WITH OR BLOCKED BY EXISTING STREET FEATURES CONTACT THE ENGINEER PRIOR TO INSTALLATION.

NO.	DATE	DESCRIPTION	APPD.

REVISION

DESIGNED BY M. Haines
CAD BY C. Shearer
CHECKED BY M. Dellinger
DATE APPROVED May 2019

X REGISTERED PROFESSIONAL ENGINEER 16660PE OREGON JULY 20, 1993 JEANNE-MARIE JEFFREY
Digital Signature
Expires 6/30/19

APPROVALS:
Lewis Wardrip — CITY TRAFFIC ENGINEER — REG. PROF. ENGR. NO. 16399PE
Steve Townsen — CITY ENGINEER — REG. PROF. ENGR. NO. 51538PE

PBOT PORTLAND BUREAU OF TRANSPORTATION
DAN SALTZMAN COMMISSIONER
STEVE TOWNSEN, P.E. CITY ENGINEER

CITY OF PORTLAND OREGON 1851

N.E. 47th Ave: N.E. Columbia Blvd. - N.E. Cornfoot Rd.

Sign and Post Data Table

1/4 SECTION 2841,2842 2941,2942
PROJECT NO. PBOT T00539 BES E10853
SHEET NO. S-4

Plot Date: 5/10/2019 1:36:41PM Filename: S:_IL Design\T00539 - NE 47th Ave LID - Columbia Blvd - Cornfoot Rd\CAD\PLAN_SHEETS\SHT S-04 SIGN AND POST DATA TABLE\PLOT_SHT_S-04.dgn

LEGEND CODE

PAN (T)	INSTALL TYPE (T) SERVICE PANEL. SEE STD. DRGS. P-670 AND P-671
RFB AC	INSTALL RRFB CONTROLLER CABINET AND AUDIBLE PUSH BUTTON INTERFACE PANEL
PP (L)	INSTALL (L) FT PIPE POST ON PEDESTAL BASE
B SLP	INSTALL STEEL BOTTLENECK STREET LIGHT POLE WITH TOWN AND COUNTRY FIXTURE. POLE AND FIXTURE TO BE POWDER COATED BLACK. FIXTURE REQUIRES 4 INCH LONG 3 INCH O.D. TENON ON POLE TOP. REFER TO PBOT STD DRG P-660 FOR FOUNDATION DETAILS.
PE	INSTALL PHOTOCELL
SB (T)	INSTALL TYPE (T) SIDEWALK PULL BOX. SEE STD. DRG. P-632
UJB	INSTALL UTILITY JUNCTION BOX
RRFB	INSTALL RECTANGULAR RAPID FLASH BEACON ASSEMBLY. SEE STD. DRG P-639
APB	INSTALL AUDIBLE PUSH BUTTON FOR RRFB SYSTEM WITH 9 IN X 12 IN SIGN, CITY SIGN CODE S2266. USE POLARA XAVII OR APPROVED EQUAL
(S)	INSTALL (S) IN DIAMETER ELECTRICAL CONDUIT
PPL	INSTALL CONDUIT PER PP&L SPECIFICATION
RS P/B	INSTALL 36 IN X 36 IN PEDESTRIAN/BIKE SYMBOL WARNING SIGN, CITY SIGN CODE W3262
RS (D)	INSTALL 12 IN X 24 IN SUPPLEMENTAL ARROW SIGN, CITY SIGN CODE S1105(L) OR S1105(R) WITH ARROW IN DIRECTION (D), L= LEFT OR R= RIGHT
(N)/(G)	INSTALL (N) - NO. (G) AWG XHHW WIRE
(N)-(X)	INSTALL (N) - (X) CONDUCTOR NO. 14 AWG CABLE
(N)-CAT6	INSTALL (N) - CAT6 OUTDOOR RATED CABLE
G (X)	INSTALL ONE (X) AWG GROUND WIRE
C-(A) (N)/(G)	INSTALL (N) - NO. (G) AWG XHHW WIRES ON CIRCUIT NUMBER (A)
UP	EXISTING UTILITY POLE

Plot Date: 2/27/2019 2:26:46 PM Filename: S:\PROJECTS\T00539 - NE 47th LID\CAD\PLAN SHEETS\TRAFFIC SIGNALS\TS-1Legend Sheet.dgn

NO.	DATE	DESCRIPTION	APPD.

REVISION

DESIGNED BY S. Bussey	DATE APPROVED March 2019
CAD BY S. Bussey	DIV. ENGINEER P. Koonce
CHECKED BY C. Radosta	INTER. NUMBER

X REGISTERED PROFESSIONAL ENGINEER 88256PE OREGON JULY 11, 2011 STEFAN WLADYSLAW BUSSEY

Digital Signature

Expires: 12/31/2019

APPROVALS:

PRINCIPAL ENGINEER — REG. PROF. ENGR. NO. 53882PE

CITY ENGINEER — REG. PROF. ENGR. NO. 51538PE

PBOT PORTLAND BUREAU OF TRANSPORTATION

CHLOE EUDALY — COMMISSIONER

STEVE TOWNSEN, P.E. — CITY ENGINEER

CITY OF PORTLAND OREGON 1851

N.E. 47th Ave: Columbia Blvd. - Cornfoot Rd.

Rectangular Rapid Flashing Beacon Legend

1/4 SECTION

PROJECT NO. T00539

SHEET NO. TS-1

CONSTRUCTION NOTES:

1. INSTALL CONDUIT RISER STUB PER PP&L SPEC. COORDINATE SERVICE CONNECTION REQUIREMENTS WITH PP&L. PP&L WORK ORDER 6580140.

2. MOUNT RRFBS AND SIGNS BACK TO BACK PER STD DRAWING P-639.

POLE NO.	X, Y COORDINATES	POLE TYPE	HAND HOLE	CONTROLLER CABINET	SERVICE CABINET	PUSH BUTTON	LUMINAIRE TYPE	LUMINAIRE COLOR TEMPERATURE
1	7660786.30, 702260.13	SLP	0				GE EPST030C3NIPBLCK	3000K
2	7660831.25, 702246.66	PP	0			180		
3	7660840.81, 702227.59	SLP	0	0	180		GE EPST030C3NIPBLCK	3000K
4	7660795.77, 702241.04	PP	0			0		

PP = Pipe Post
SLP = Street Light Pole

POLE ORIENTATION & ATTACHMENT CHART

N.E. 47th AVE.

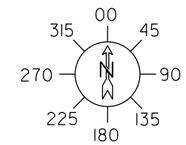

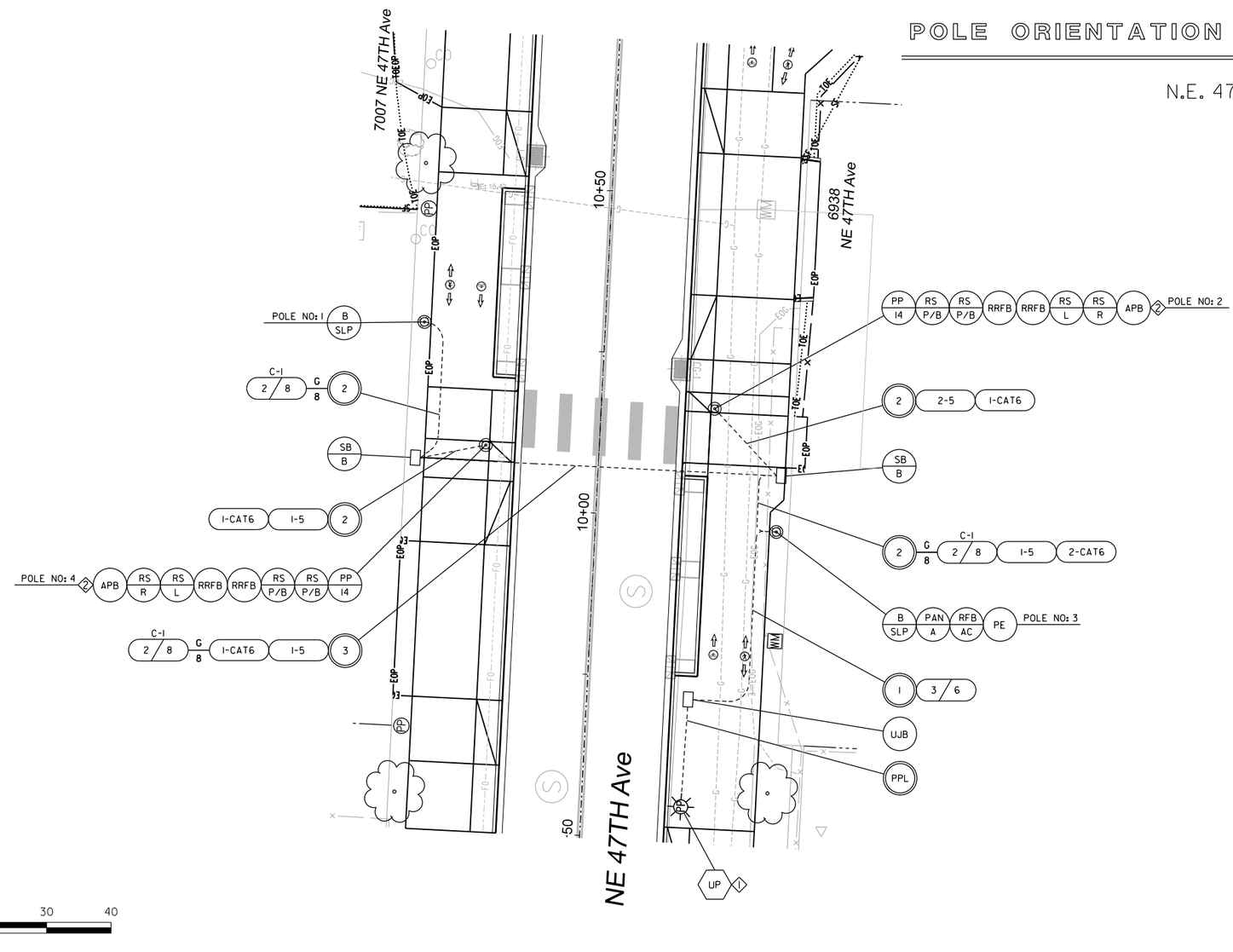

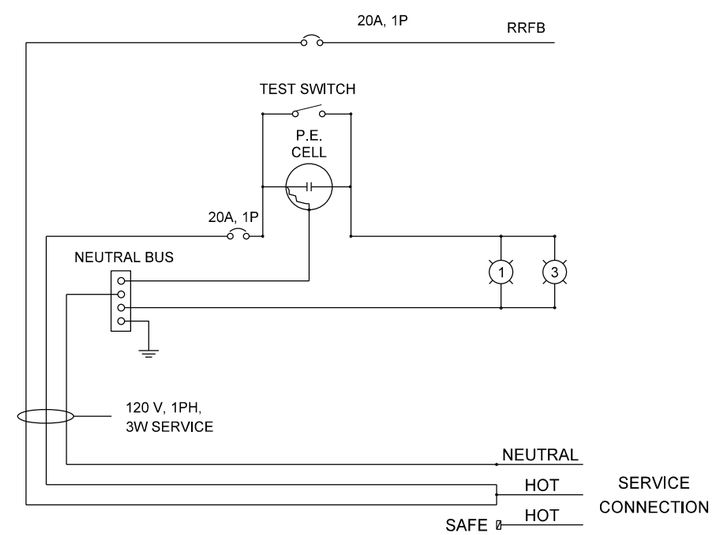

SCHEMATIC - NEW TYPE A PANEL
LOCATED NEAR
6938 NE 47TH AVE

NO.	DATE	DESCRIPTION	APPD.

REVISION

DESIGNED BY S. Bussey	DATE APPROVED March 2019
CAD BY S. Bussey	DIV. ENGINEER P. Koonce
CHECKED BY C. Radosta	INTER. NUMBER

REGISTERED PROFESSIONAL ENGINEER 88256PE OREGON JULY 11, 2017 STEFAN WLADYSLAW BUSSEY
Digital Signature
Expires: 12/31/2019

APPROVALS:
PRINCIPAL ENGINEER — REG. PROF. ENGR. NO. 53882PE
CITY ENGINEER — REG. PROF. ENGR. NO. 51538PE

PBOT
PORTLAND BUREAU OF TRANSPORTATION
CHLOE EUDALY, COMMISSIONER
STEVE TOWNSEN, P.E., CITY ENGINEER

CITY OF PORTLAND, OREGON 1851

N.E. 47th Ave: Columbia Blvd. - Cornfoot Rd.

Rectangular Rapid Flashing Beacon

1/4 SECTION 2841,2842 2941,2942
PROJECT NO. T00539
SHEET NO. TS-2

Plot Date: 2/27/2019 2:27:30 PM Filename: S:\PROJECTS\T00539 - NE 47th LID\CAD\PLAN SHEETS\TRAFFIC SIGNALS\TS-2 RRFB Plan.dgn

Bid Documents

NE 47th Ave (LID)

12" DI Main

Legend

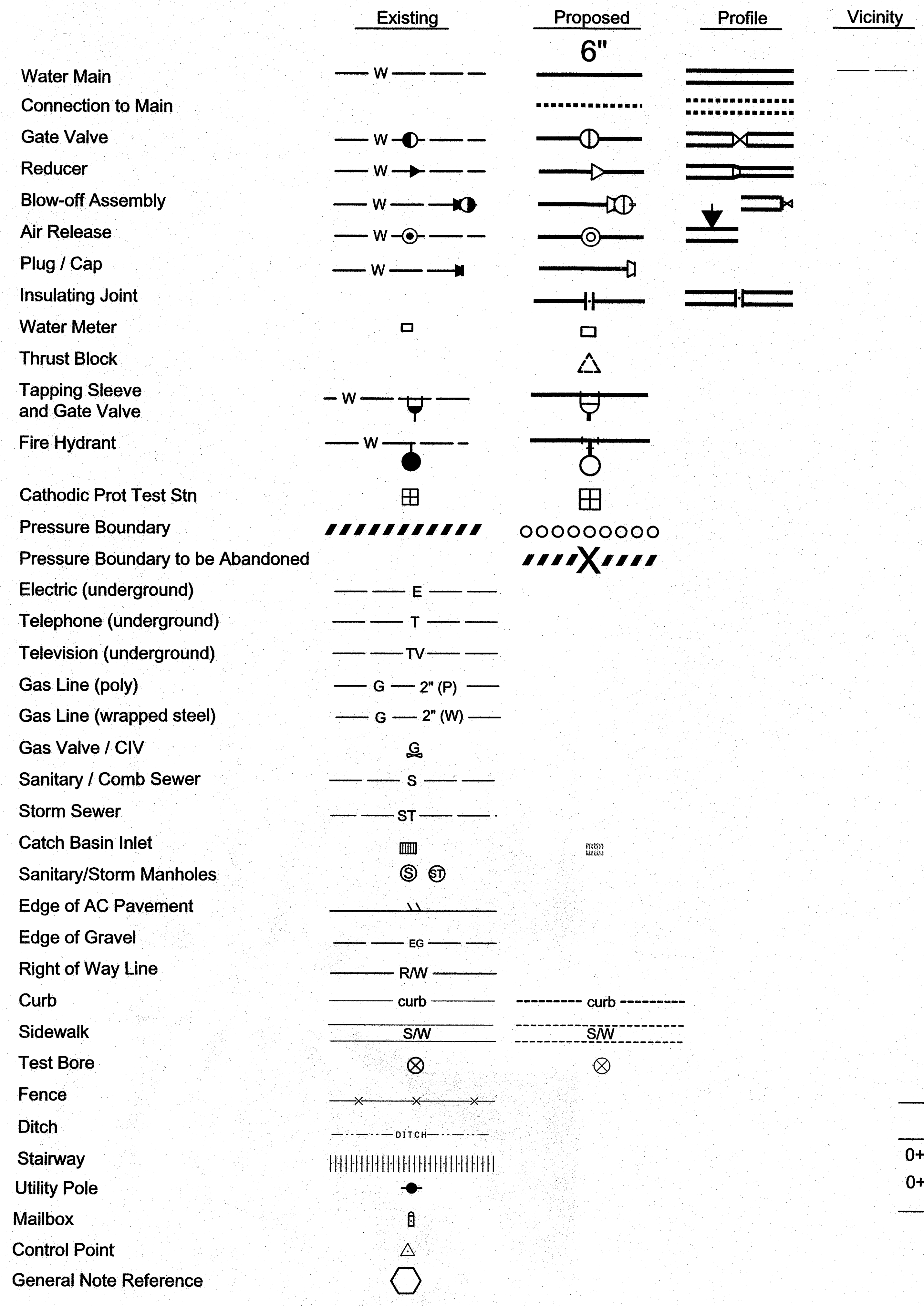

General Notes

1. All work is to be constructed in accordance with the most recent version of the City of Portland Standard Construction Specifications, The Erosion Control Manual developed by the Bureau of Development Services, and the Oregon Administrative Rule (OAR), Chapter 333.
2. ATTENTION: Oregon law requires you to follow rules adopted by the Oregon Utility Notification Center. Those rules are set forth in OAR 952-001-0010 through OAR 952-001-0090. You may obtain copies of the rules by calling the Center. The Center business number is 503-232-1987. Excavators are required to notify the Center at least 2 business days, but not more than 10 business days, before commencing an excavation. To comply, call 811 or 1-800-332-2344.
3. Concrete restoration shall be as follows:
   a. All concrete in traveled roadway shall be class 4000-1½".
   b. Miscellaneous concrete shall be class 3000-1½", unless otherwise specified.
4. When crossing under a sanitary sewer or with less than 1½ feet clearance, notify engineering contact person.
5. Where ductile iron (DI) pipe crosses a main that is cathodically protected:
   a. Center a full length of DI pipe over the crossing and sleeve the barrel of the DI pipe in schedule 80 PVC pipe and seal the sleeve ends with Fernco type coupling, per standard drawing P-770.
   b. Where the piping configuration does not permit the above installation, wrap or encase the DI pipe in 40 mil reinforced PVC geomembrane for 20' length, 10' each side of the crossing, per standard drawing P-770. Fill around the geomembrane shall be sand or ¼" minus aggregate.
6. Provide "As Constructed" drawings indicating all changes in grade, alignment, fittings and materials installed or any other utilities or obstacles not so indicated on these plans.
7. All elevations shown on the plans are City of Portland datum dated 1896. This datum has its zero elevation equivalent to 1.375 feet below mean sea level as set by the U.S. Coast and Geodetic Survey, 1947 adjustment.
8. All connections to existing water mains and transfer of services to new mains will be made by the Portland Water Bureau, after the pipe has been tested, disinfected, and the installation accepted by the City. The contractor shall ensure alignment of the pipe both vertically and horizontally at the points of connection.
9. Main shall have a minimum of 3.5 feet of cover from top of pipe to finished street grade, or as approved by the engineering contact person.

Resurfacing Schedule

Aggregate paving base consists of ¾" - 0" to 1"-0" imported crushed aggregate. See Specifications.

Station	Existing	Classification	Replacement
0+00A to 11+24A 0+00B to 8+09B	AC on Aggregate Base	Arterial	3" temporary AC patch

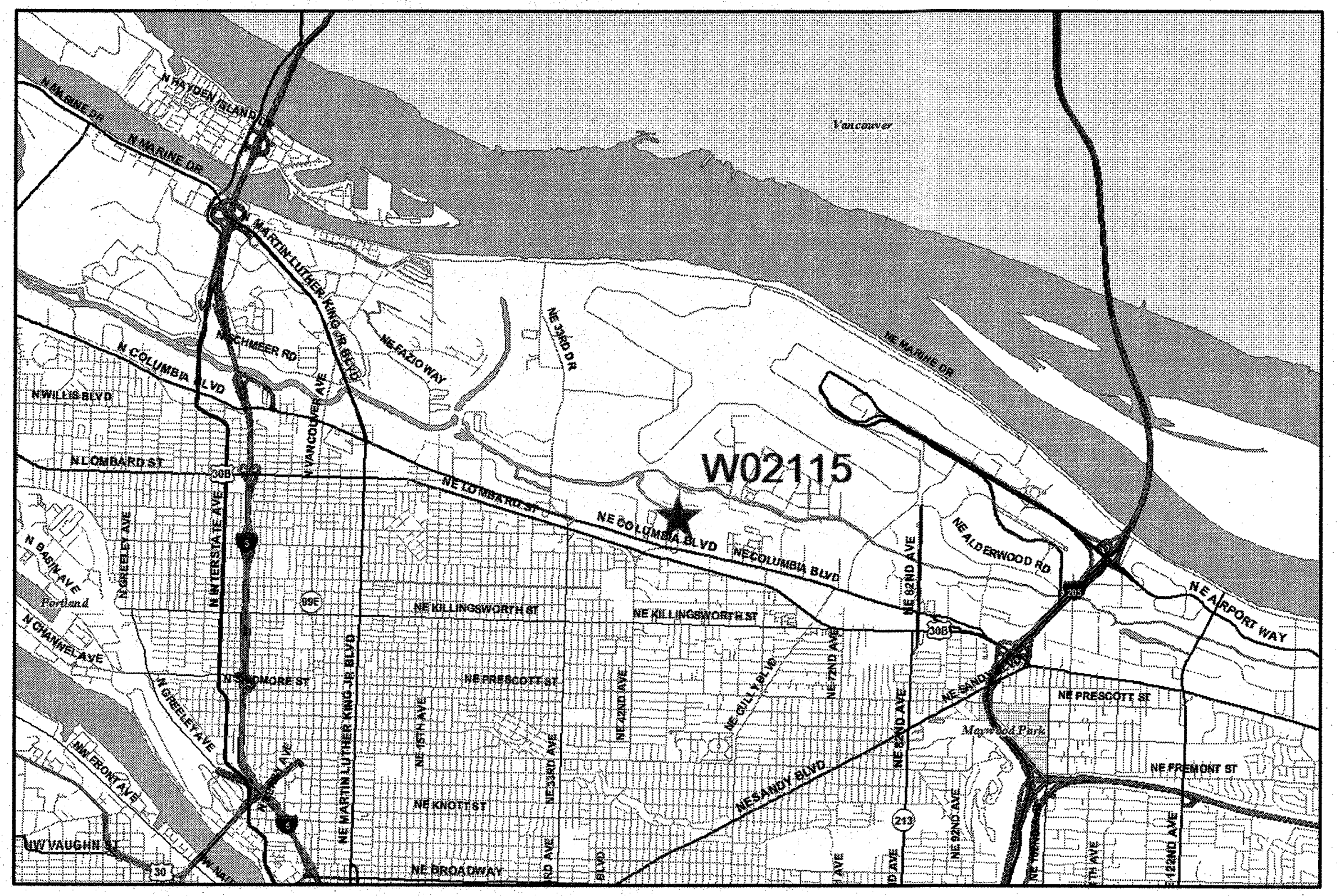

Location Map

NTS

Vicinity Map, See Sheet 2

Township/Range	1N2E18ba/bd
Street Opening Permit Number and Date	
Synergen Work Order Number	
Locate Call In Reference Number	

3/21/2019 9:59:19 AM K:\Projects\W02100 - W02199\W02115_NE_47th_Ave_LID\W02115.dgn

No	Date	Description	Appd
	Revision		
Survey		Other	

Designed By	JJ	Program Mgr	RAS
CAD Checked By	SWR	Const Mgr	RL
Checked By	DM	Const Supvr	~~RAS~~
Project Mgr	DA	Date	

REGISTERED PROFESSIONAL ENGINEER
80179
OREGON
JUNE 7, 2012
JONATHAN D. JOHNSON
EXPIRES 6-30-2019

PORTLAND WATER BUREAU
FROM FOREST TO FAUCET

Teresa K Elliott, Chief Engineer, PE No 19174 — 4/1/2019 Date

Jodie A. Inman, Principal Engineer, PE No 61197 — 3/27/19 Date

12" DI Main

NE 47th Ave (LID)

From NE Columbia Blvd
To NE Crystal Ln

Title Sheet

SAP Project No
W02115

1/4 Section
2335

Sheet No
1 of 10

Bid Documents

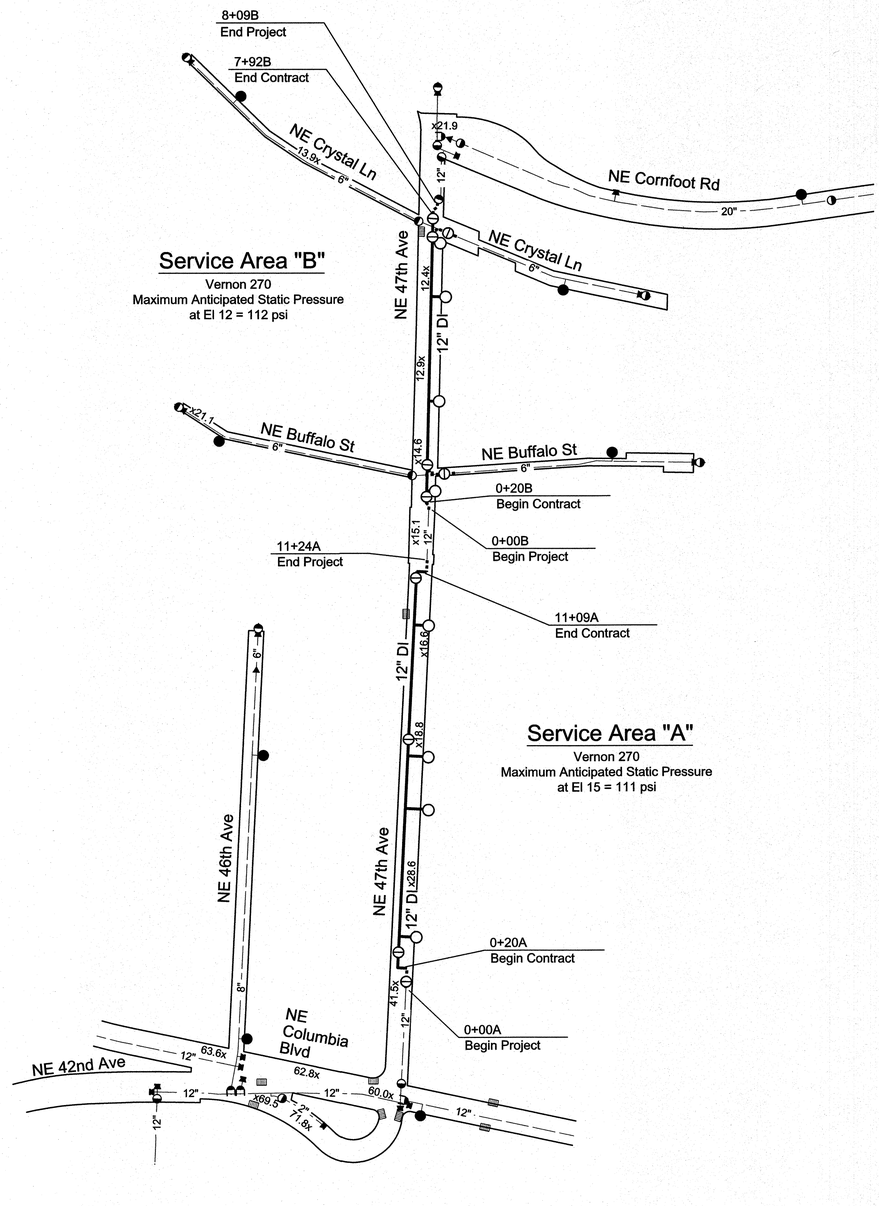

Vicinity Map

NTS

Confidential

No	Date	Description	Appd

Revision

Survey | Other

Designed By	JJ	Program Mgr	RAS
CAD Checked By		Const Mgr	
Checked By	DM	Const Supvr	
Project Mgr		Date	

REGISTERED PROFESSIONAL ENGINEER 80179 OREGON JUNE 7, 2012 JONATHAN D. JOHNSON

EXPIRES 6-30-2019

PORTLAND WATER BUREAU

FROM FOREST TO FAUCET

Jodie A. Inman, Principal Engineer, PE No 61197

3/27/19
Date

CITY OF PORTLAND, OREGON 1851

12" DI Main

NE 47th Ave (LID)

From NE Columbia Blvd
To NE Crystal Ln

Erosion Control Area and Vicinity Map

SAP Project No
W02115

1/4 Section
2335

Sheet No
2 of 10

K:\Projects\W02100 - W02199\W02115_NE_47th_Ave_LID\W02115.dgn

3/21/2019 9:59:38 AM

Bid Documents

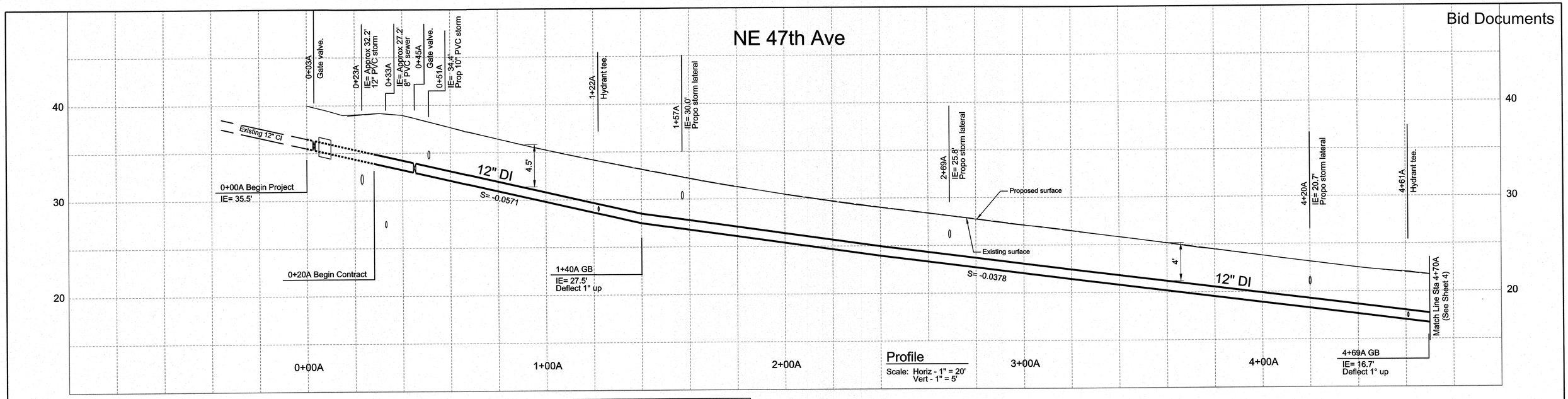

Restrain All Joints

Notes:

1. Install 1" sleeved service. See Details 1, 2, and 3, Sheet 9 and Std Drawing P-780, Sheet 10.
2. Backside plumbing to be installed by professional plumber.

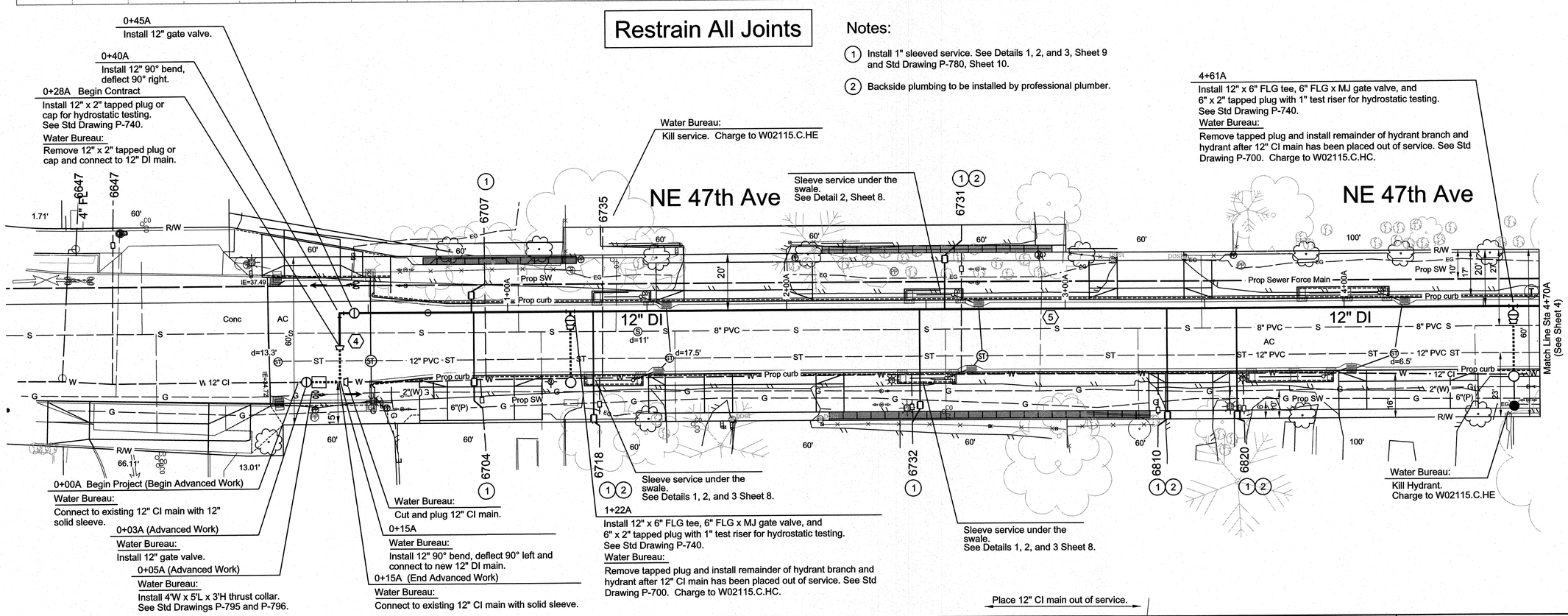

Confidential

No	Date	Description	Appd
		Revision	
Survey		Other	

Designed By JJ | Program Mgr RAS
CAD Checked By GPC | Const Mgr RL
Checked By DM | Const Supvr MM
Project Mgr DA | Date

REGISTERED PROFESSIONAL ENGINEER 80179 OREGON JUNE 7, 2012 JONATHAN D. JOHNSON
EXPIRES 6-30-2019

PORTLAND WATER BUREAU
FROM FOREST TO FAUCET

Jodie A. Inman, Principal Engineer, PE No 61197
8/27/19 Date

CITY OF PORTLAND OREGON 1851

12" DI Main
NE 47th Ave (LID)
From NE Columbia Blvd
To NE Crystal Ln
Plan Sheet Sta 0+00A to 4+70A

SAP Project No W02115
1/4 Section 2335
Sheet No 3 of 10

K:\Projects\W02100 - W02199\W02115_NE_47th_Ave_LID\W02115.dgn 9:42:11 AM 3/21/2019

Bid Documents

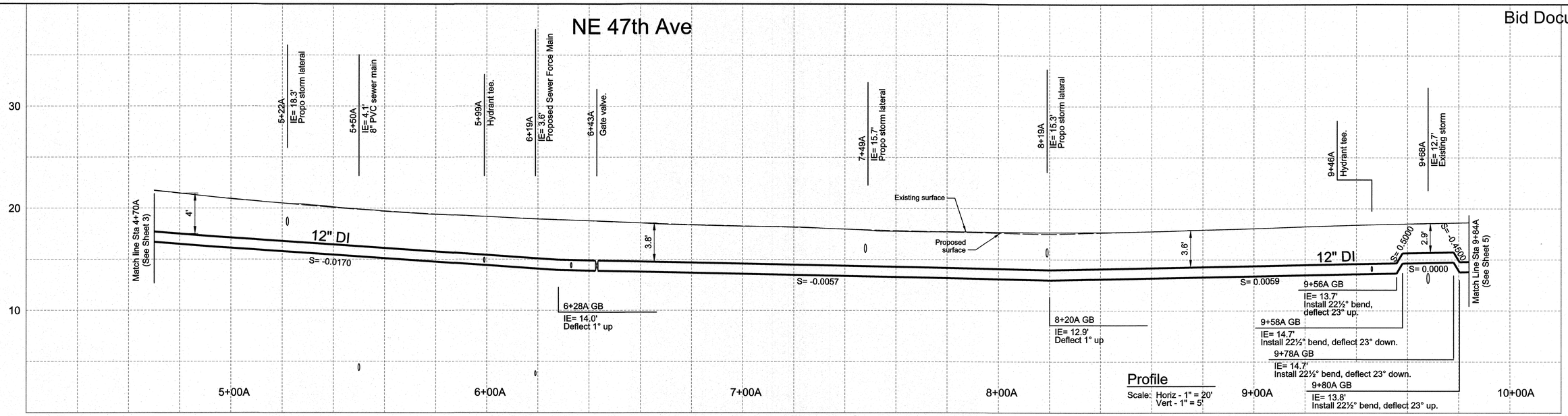

Restrain All Joints

Notes:

1. Install 1" sleeved service. See Details 1, 2, and 3, Sheet 9 and Std Drawing P-780, Sheet 10.
2. Backside plumbing to be installed by professional plumber.
3. Install 2" service. See Detail 3, Sheet 8. Charge to W02115.C.SC

9+46A
Install 12" x 6" FLG tee, 6" FLG x MJ gate valve, and 6" x 2" tapped plug with 1" test riser for hydrostatic testing. See Std Drawing P-740.
Water Bureau:
Remove tapped plug and install remainder of hydrant branch and hydrant after 12" CI main has been placed out of service. See Std Drawing P-700. Charge to W02115.C.HC.

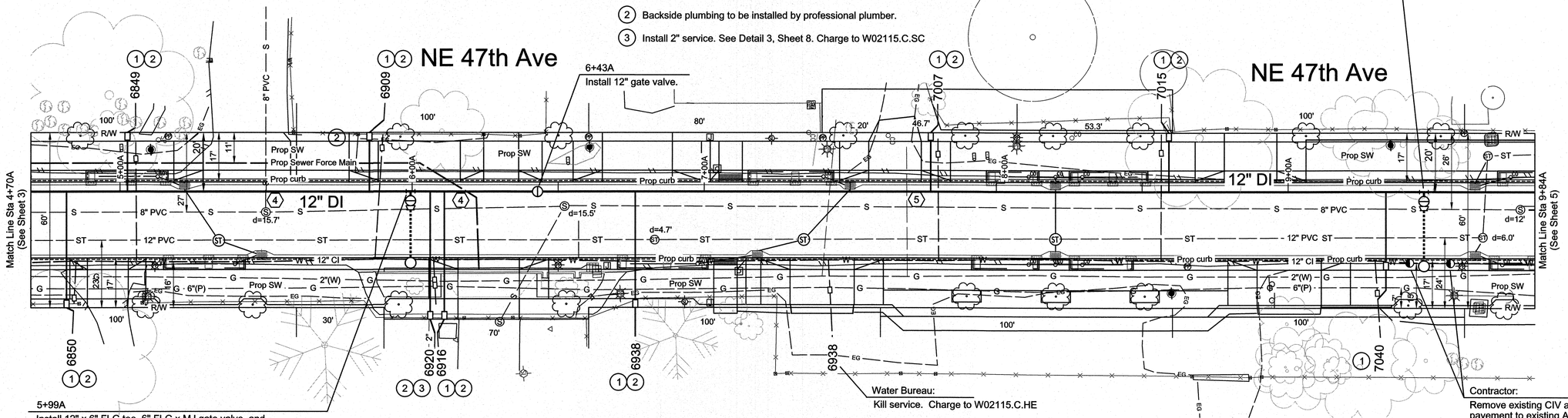

5+99A
Install 12" x 6" FLG tee, 6" FLG x MJ gate valve, and 6" x 2" tapped plug with 1" test riser for hydrostatic testing. See Std Drawing P-740.
Water Bureau:
Remove tapped plug and install remainder of hydrant branch and hydrant after 12" CI main has been placed out of service. See Std Drawing P-700. Charge to W02115.C.HC.

0 10 20
scale in feet

Confidential

No	Date	Description	Appd

Revision

Survey | Other

Designed By	JJ	Program Mgr	RAS
CAD Checked By		Const Mgr	RL
Checked By	DM	Const Supvr	
Project Mgr	DA	Date	

REGISTERED PROFESSIONAL ENGINEER 80179 OREGON JUNE 7, 2012 JONATHAN D. JOHNSON
EXPIRES 6-30-2019

PORTLAND WATER BUREAU
FROM FOREST TO FAUCET

Jodie A. Inman, Principal Engineer, PE No 61197

3/27/19
Date

CITY OF PORTLAND OREGON 1851

12" DI Main

NE 47th Ave (LID)

From NE Columbia Blvd
To NE Crystal Ln

Plan Sheet Sta 4+69A to 9+84A

SAP Project No W02115
1/4 Section 2335
Sheet No 4 of 10

K:\Projects\W02100 - W02199\W02115_NE_47th_Ave_LID\W02115.dgn
9:59:55 AM
3/21/2019

Bid Documents

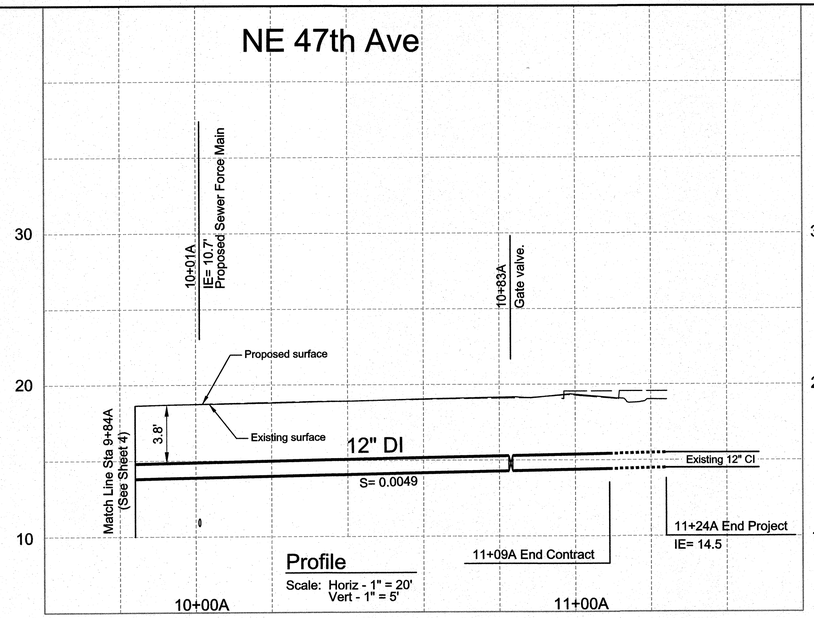

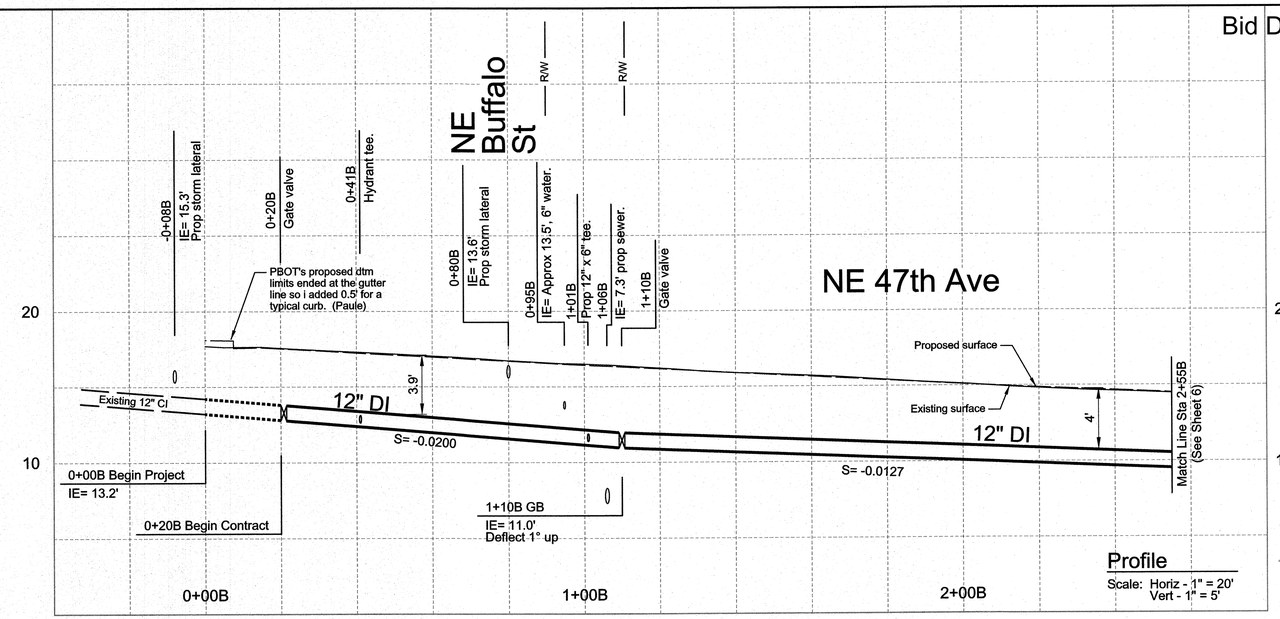

Notes:

1. Install 1" sleeved service. See Details 1, 2, and 3, Sheet 9 and Std Drawing P-780, Sheet 10.
2. Backside plumbing to be installed by professional plumber.

Restrain All Joints

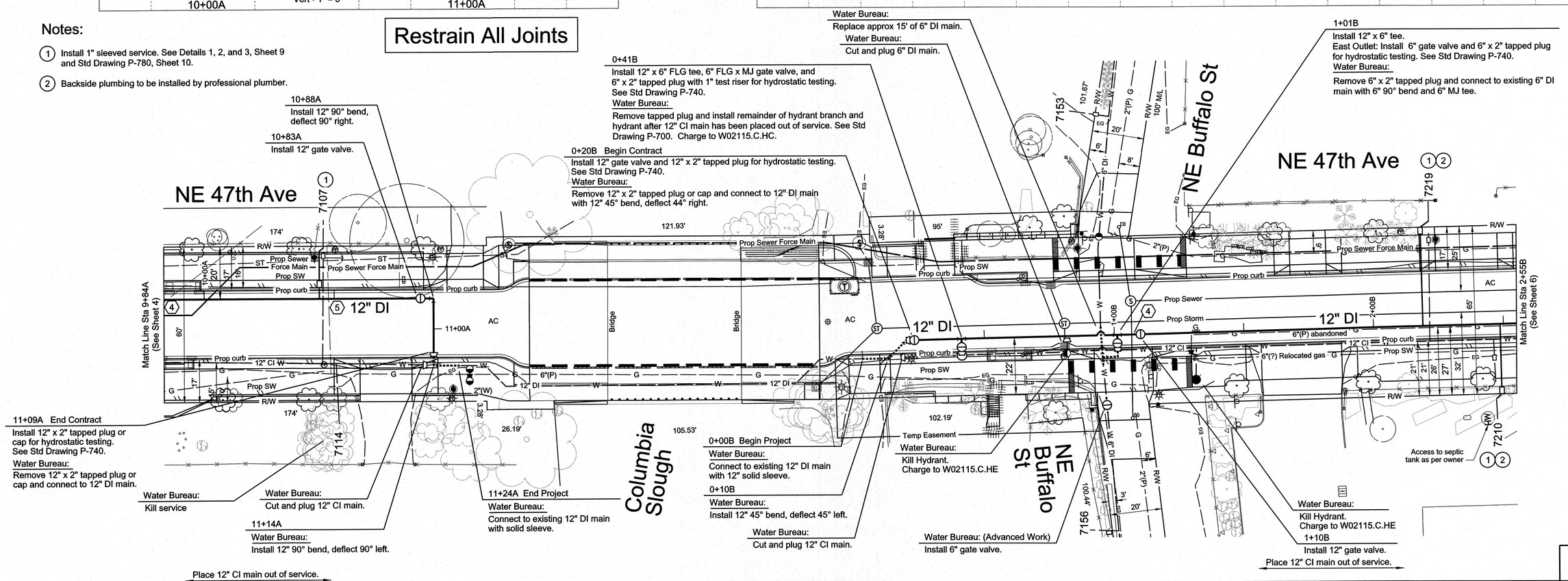

Confidential

No	Date	Description	Appd

Revision

Survey | Other

Designed By	JJ	Program Mgr	RAS
CAD Checked By		Const Mgr	RL
Checked By	DM	Const Supvr	
Project Mgr	DA	Date	

REGISTERED PROFESSIONAL ENGINEER 80179 OREGON JUNE 7, 2012 JONATHAN D. JOHNSON

EXPIRES 6-30-2019

PORTLAND WATER BUREAU
FROM FOREST TO FAUCET

Jodie A. Inman, Principal Engineer, PE No 61197 — Date 3/27/19

CITY OF PORTLAND OREGON 1851

12" DI Main

NE 47th Ave (LID)

From NE Columbia Blvd
To NE Crystal Ln

Plan Sheet Sta 9+84A to 11+24A &
Sta 0+00B to 2+55B

SAP Project No: W02115
1/4 Section: 2335
Sheet No: 5 of 10

3/21/2019 10:00:09 AM K:\Projects\W02100 - W02199\W02115_NE_47th_Ave_LID\W02115.dgn

Bid Documents

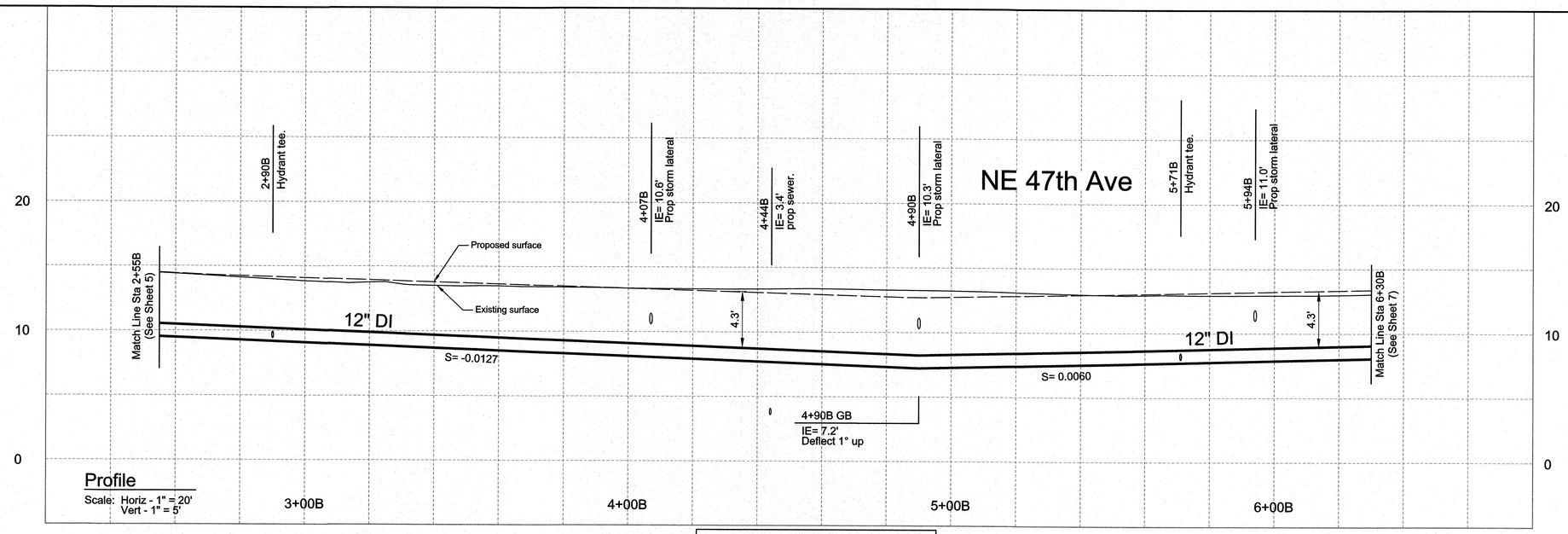

Restrain All Joints

Notes:

1. Install 1" sleeved service. See Details 1, 2, and 3, Sheet 9 and Std Drawing P-780, Sheet 10.
2. Backside plumbing to be installed by professional plumber.

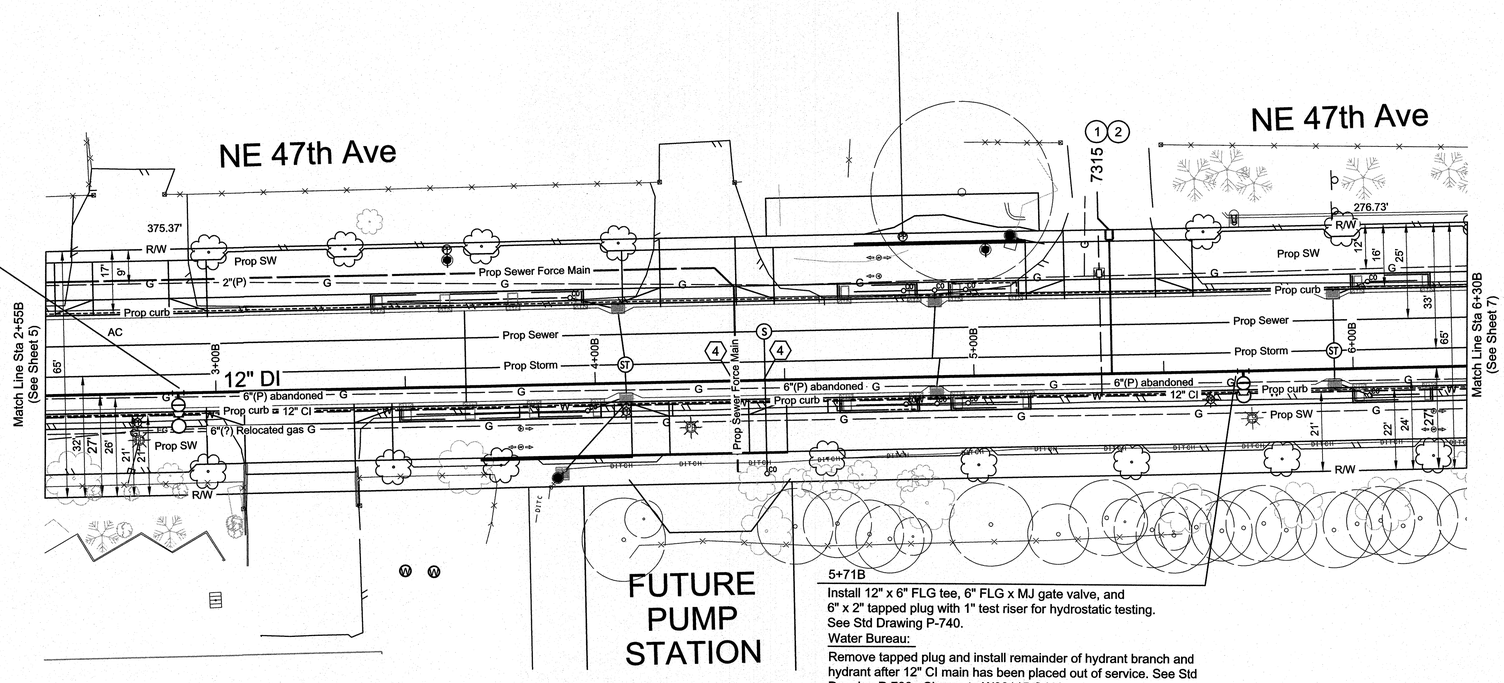

2+90B

Install 12" x 6" FLG tee, 6" FLG x MJ gate valve, and 6" x 2" tapped plug with 1" test riser for hydrostatic testing. See Std Drawing P-740.

Water Bureau:

Remove tapped plug and install remainder of hydrant branch and hydrant after 12" CI main has been placed out of service. See Std Drawing P-700. Charge to W02115.C.HC.

5+71B

Install 12" x 6" FLG tee, 6" FLG x MJ gate valve, and 6" x 2" tapped plug with 1" test riser for hydrostatic testing. See Std Drawing P-740.

Water Bureau:

Remove tapped plug and install remainder of hydrant branch and hydrant after 12" CI main has been placed out of service. See Std Drawing P-700. Charge to W02115.C.HC.

Place 12" CI main out of service.

0 10 20
scale in feet

Confidential

No	Date	Description	Appd

Revision

Survey | Other

Designed By JJ
CAD Checked By
Checked By
Project Mgr
Program Mgr RAS
Const Mgr RL
Const Supvr
Date

REGISTERED PROFESSIONAL ENGINEER 80179 OREGON JUNE 7, 2012 JONATHAN D. JOHNSON
EXPIRES 6-30-2019

PORTLAND WATER BUREAU
FROM FOREST TO FAUCET

Jodie A. Inman, Principal Engineer, PE No 61197
3/27/19
Date

CITY OF PORTLAND OREGON 1851

12" DI Main

NE 47th Ave (LID)

From NE Columbia Blvd
To NE Crystal Ln

Plan Sheet Sta 2+55B to 6+30B

SAP Project No W02115
1/4 Section 2335
Sheet No 6 of 10

K:\Projects\W02100 - W02199\W02115_NE_47th_Ave_LID\W02115.dgn
10:00:22 AM
3/21/2019

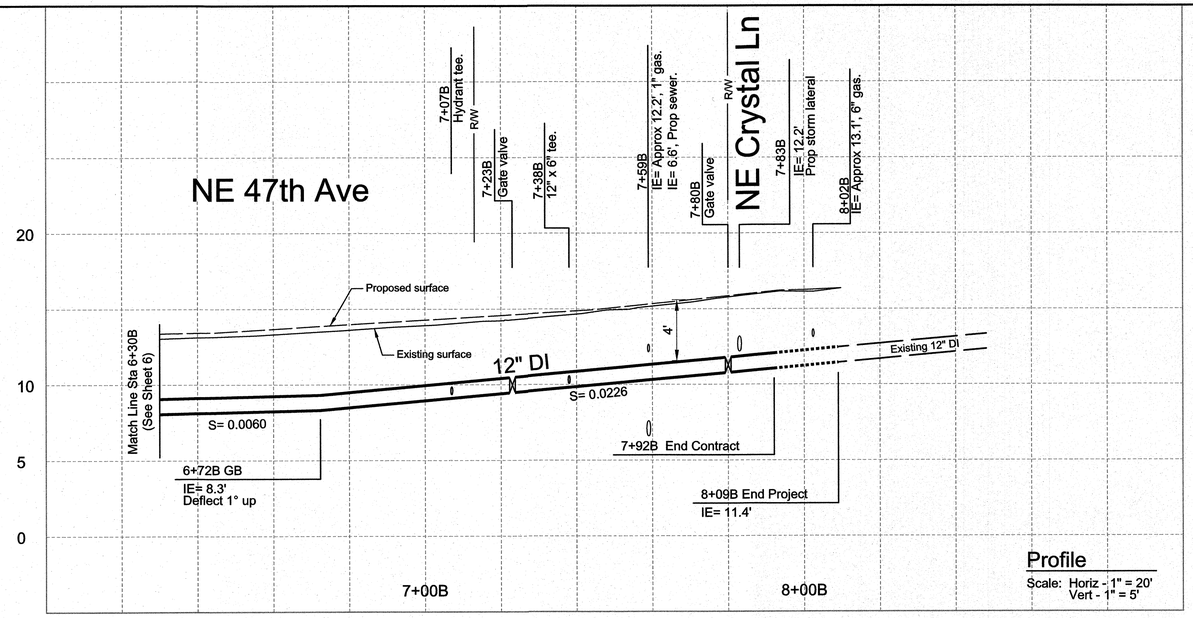

Profile

Scale: Horiz - 1" = 20'
Vert - 1" = 5'

Restrain All Joints

7+38B
Install 12" x 6" tee.
East Outlet: Install 6" x 2" tapped plug for hydrostatic testing. See Std Drawing P-740.
Water Bureau:
Remove 6" x 2" tapped plug and connect to existing 6" DI main with 6" 45° bend, 6" 22½° bend and 6" x 6" tee.

7+23B
Install 12" gate valve.

7+92B End Contract
Install 12" x 2" tapped plug or cap for hydrostatic testing. See Std Drawing P-740.
Water Bureau:
Remove 12" x 2" tapped plug or cap and connect to 12" DI main with 12" 45° bend, deflect 44° right.

7+99B
Water Bureau:
Install 12" 45° bend, deflect 42° left.

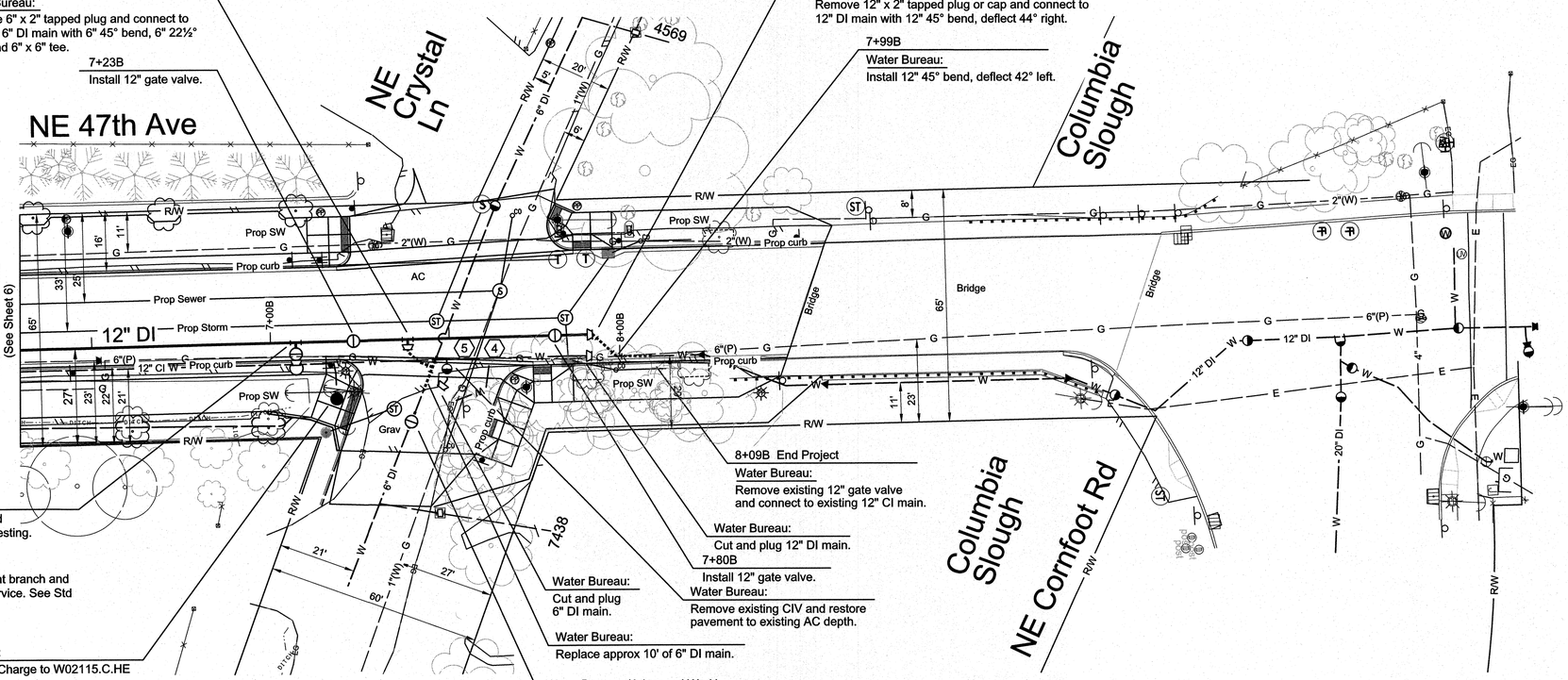

0 10 20
scale in feet

Confidential

No	Date	Description	Appd

Revision

Survey | Other

Designed By	JJ	Program Mgr	RAS
CAD Checked By		Const Mgr	RL
Checked By	DM	Const Supvr	
Project Mgr	DA	Date	

REGISTERED PROFESSIONAL ENGINEER 80179 OREGON JUNE 7, 2012 JONATHAN D. JOHNSON

EXPIRES 6-30-2019

PORTLAND WATER BUREAU
FROM FOREST TO FAUCET

Jodie A. Inman, Principal Engineer, PE No 61197

3/27/19
Date

CITY OF PORTLAND, OREGON 1851

12" DI Main

NE 47th Ave (LID)

From NE Columbia Blvd
To NE Crystal Ln

Plan Sheet Sta 6+30B to 8+09B

SAP Project No W02115
1/4 Section 2335
Sheet No 7 of 10

3/21/2019 9:43:39 AM K:\Projects\W02100 - W02199\W02115_NE_47th_Ave_LID\W02115.dgn

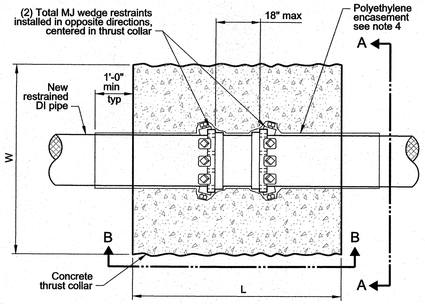

Concrete Thrust Collar Plan View

NTS

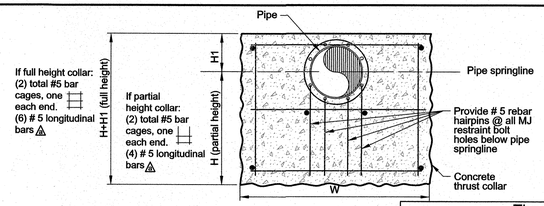

⚠ longitudinal bars run parallel to pipe

End Elevation A-A

NTS

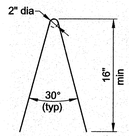

Rebar Hairpins

Thrust Collar Size

Use of table requires:
1. Top of pipe 3 feet min below surface;
2. Water pressure 150 psi max; and
3. Tie-in connection 3W min length from collar.
If these required conditions are not met contact Project Engineer.

Pipe Diameter (inches)	Width W (ft)	Length L (ft)	Height H (ft)	H1 (ft) * see note 6 ** see note 7
6	2.5	2.5	2	0 *
8	3	3.5	2	0 *
12	4.5	5	2	1
16	5.5	6	3	1
20	6	6.5	4	2 **
24	6.5	9	4.5	2 **

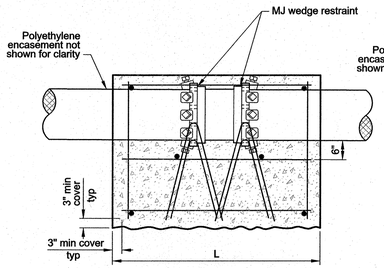

Side Elevation B-B

NTS

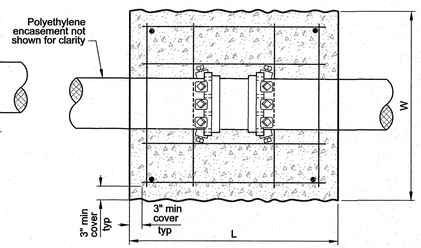

Reinforcing Plan

NTS

Note:
Rebar hairpins not shown for clarity

Notes:
1. All reinforcing steel to be ASTM A615, Grade 60 (60ksi).
2. Concrete compressive strength to be 3,000 psi prior to the thrust force.
3. When possible, excavation should match thrust collar dimensions so concrete is placed directly against native soil on sides and bottom. When side forms are necessary, pull forms and compact according to note 5.
4. Polyethylene wrap (AWWA C105) to prevent concrete intrusion into wedge pocket of the retainer gland. Keep wrap loose to allow concrete bearing against retainer.
5. Compact excavation backfill to 95% of the maximum density according to Standard Proctor (ASTM D698) or to 90% of the maximum density according to the Modified Proctor (ASTM D1557).
6. For split ring couplings H1 shall be 1 ft min.
7. The excavation competent person shall approve site conditions. For pipe diameter greater than 16" the Project Engineer must also approve site conditions.
8. For alternate dimensions of thrust collar, contact Project Engineer of Record for project specific design.

1/8 P-795 Concrete Thrust Collar DI Pipe

NTS

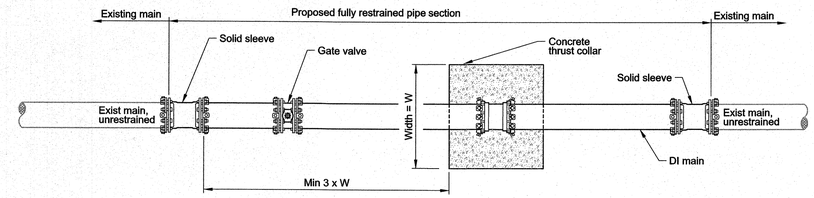

Phase 1: Install Restrained Pipe Section and Thrust Collar

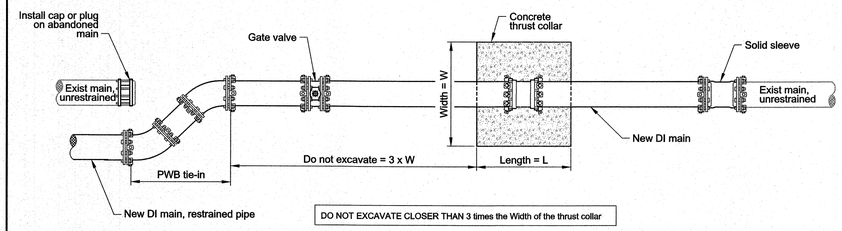

DO NOT EXCAVATE CLOSER THAN 3 times the Width of the thrust collar

Phase 2: Water Bureau Post Contract Work Plan

Construction Sequencing Notes

Phase 1: Advanced Thrust Collar Installation
1. Perform shut down on existing main.
2. Install fully restrained pipe section. Pipe length between thrust collar and tie-in connection shall be minimum 3 times thrust collar width.
3. Place concrete thrust collar per Std Drawing P-795.
4. Backfill and compact.
5. Do not close gate valve until concrete reaches a compressive strength of 3,000 psi.

Phase 2: Tie-in
1. If there is excavation work by others within 50 feet of thrust collar, do not begin tie-in work without contacting Project Engineer for approval to proceed.
2. Do not excavate closer than 3 times the width of thrust collar.
3. Install tie-in with fully restrained pipe section.

General Note:
1. Thrust collar is designed to address connection to existing unrestrained pipe section. Joint restraint for tie-in to be designed by Project Engineer of Record.

2/8 P-796 Concrete Thrust Collar Sequencing Plan

NTS

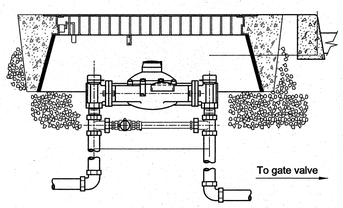

Short Meter Set

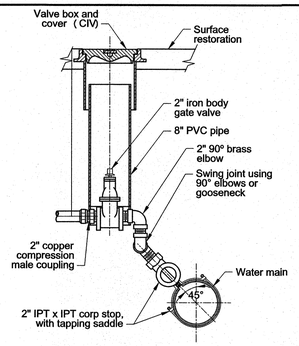

Gate Valve

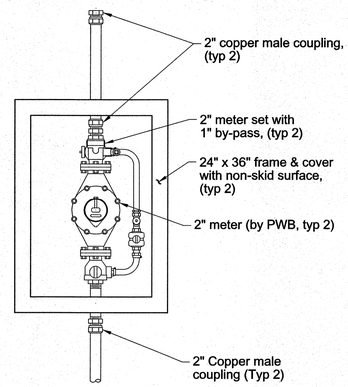

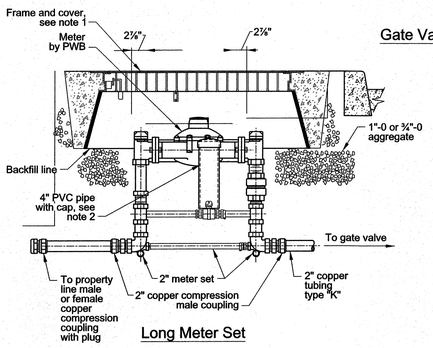

Long Meter Set

Notes:
1. Install 24" x 36" frame and cover and # 9 wood form with non-skid surface. Install 12" x 14" and 14" x 20" cast iron frame and covers and # 8 wood form together in driveways. Pour concrete around wood form to fill to surrounding backfill.
2. If using full size meter setter, rotate ball valve and 4" PVC pipe on bypass outward approximately 7" to clear meter.
3. Contractor to install test/sample riser (see Std Drawing P-740). PWB to install meter setter and meter unless otherwise specified.
4. Valve location shall be adjusted to allow installation of valve box and cover (CIV) in the flow line of the inlet.

3/8 2" Service

NTS

No	Date	Description	Appd

Revision

Survey | Other

Designed By | Program Mgr | JJ | RAS
CAD Checked By | Const Mgr | RL
Checked By | Const Supvr
Project Mgr | DA | Date

REGISTERED PROFESSIONAL ENGINEER 80179 OREGON JUNE 7, 2012 JONATHAN D. JOHNSON
EXPIRES 6-30-2019

PORTLAND WATER BUREAU
FROM FOREST TO FAUCET

Jodie A. Inman, Principal Engineer, PE No 61197 — Date 3/27/19

CITY OF PORTLAND OREGON 1851

12" DI Main

NE 47th Ave (LID)

From NE Columbia Blvd
To NE Crystal Ln

Details

SAP Project No W02115
1/4 Section 2335
Sheet No 8 of 10

K:\Projects\W02100 - W02199\W02115_NE_47th_Ave_LID\W02115.dgn
10:00:40 AM
3/21/2019

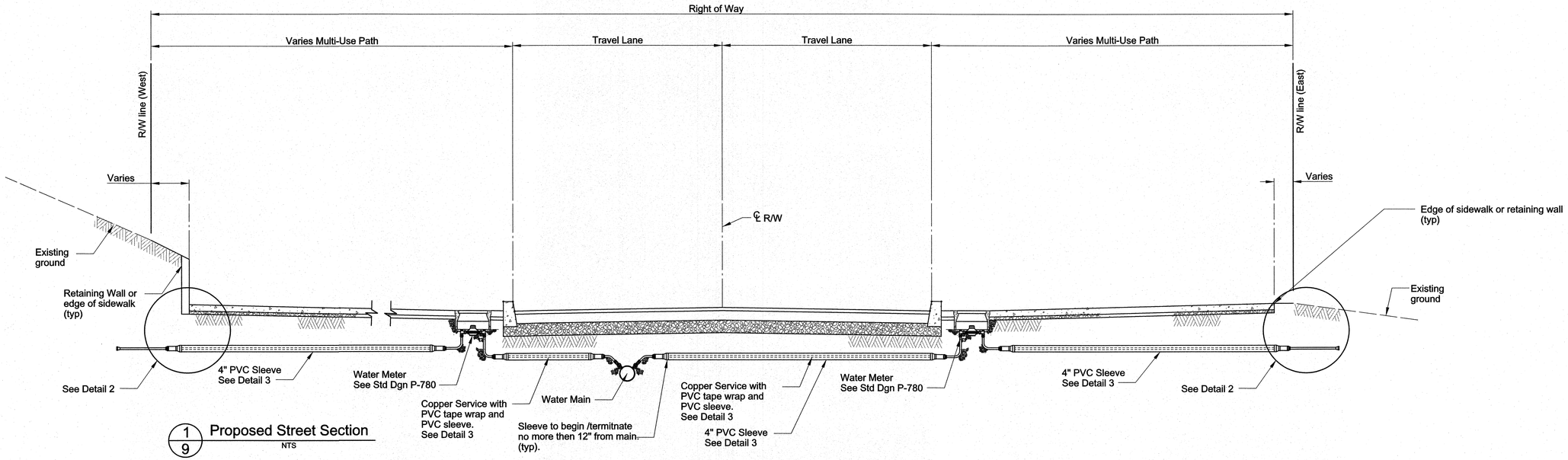

1/9 Proposed Street Section
NTS

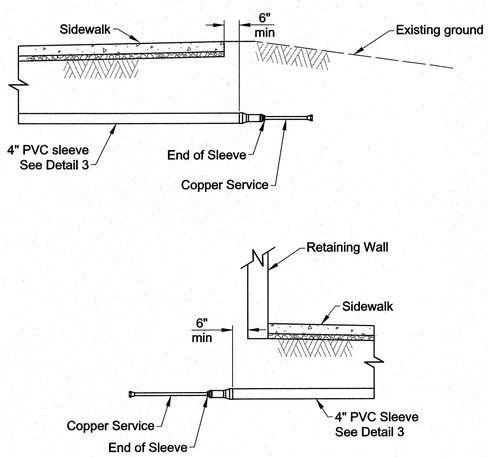

2/9 Sleeved Service End Points
NTS

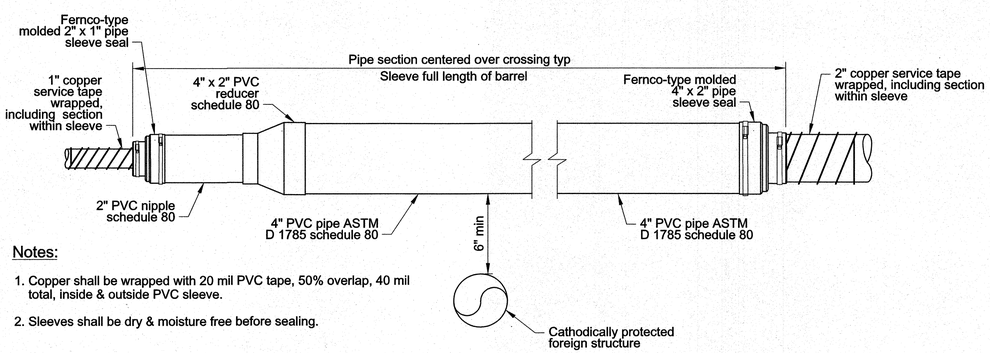

Notes:

1. Copper shall be wrapped with 20 mil PVC tape, 50% overlap, 40 mil total, inside & outside PVC sleeve.
2. Sleeves shall be dry & moisture free before sealing.

3/9 Sleeved Copper Service
NTS

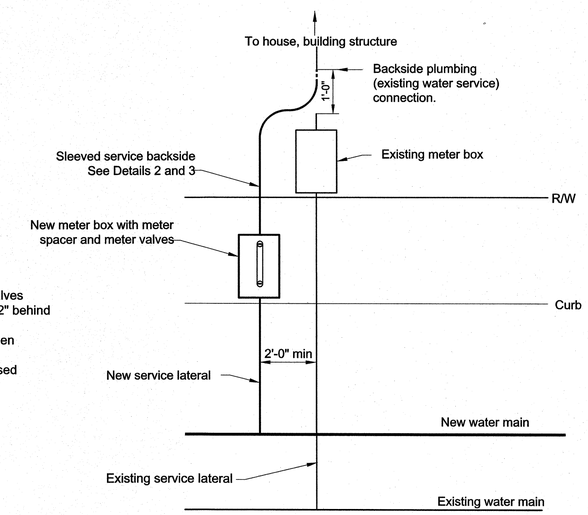

Notes:

Contractor:

1. Install temporary meter spacer, angle ball meter valves and connect to backside plumbing no more than 12" behind back of walk or retaining wall.
2. Connect backside plumbing after new main has been activated by PWB.
3. Connection to backside plumbing shall be by licensed plumber in the State of Oregon.
4. Remove existing meter box and protect meter.
5. Match existing backside service material.

Water Bureau:

1. Remove meter spacer and activate service.
2. PWB to relocate old meter to new meter location.

4/9 1" Service Installation With Backside Service Connection
NTS

No	Date	Description	Appd

Revision

Survey | Other

Designed By JJ	JJ	Program Mgr RAS	RAS
CAD Checked By		Const Mgr	RL
Checked By DM	DM	Const Supvr	
Project Mgr	DA	Date	

REGISTERED PROFESSIONAL ENGINEER 80179 OREGON JUNE 7, 2012 JONATHAN D. JOHNSON
EXPIRES 6-30-2019

PORTLAND WATER BUREAU
FROM FOREST TO FAUCET

Jodie A. Inman, Principal Engineer, PE No 61197
3/27/19 Date

CITY OF PORTLAND OREGON 1851

12" DI Main
NE 47th Ave (LID)
From NE Columbia Blvd To NE Crystal Ln
Details

SAP Project No W02115
1/4 Section 2335
Sheet No 9 of 10

K:\Projects\W02100 - W02199\W02115_NE_47th_Ave_LID\W02115.dgn
10:00:53 AM
3/21/2019

Bid Documents

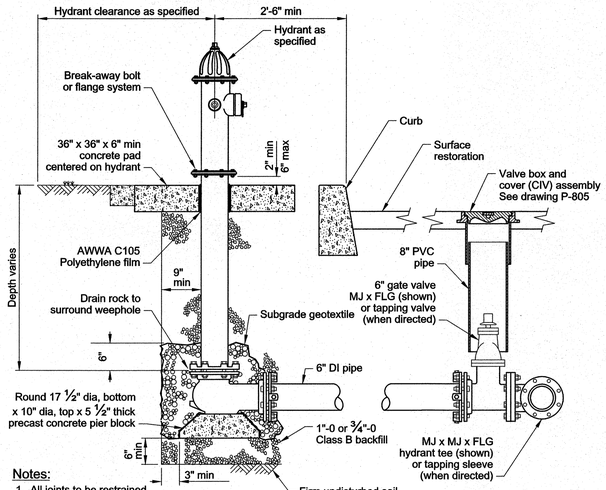

Notes:

1. All joints to be restrained.
2. Hydrant to be painted as specified.
3. Concrete pad and sidewalk replacement as needed to match existing scoring pattern.
4. Extend concrete pad to curb or sidewalk when the distance between the concrete pad and the curb or sidewalk is 1' or less.

P-700

FIRE HYDRANT ASSEMBLY

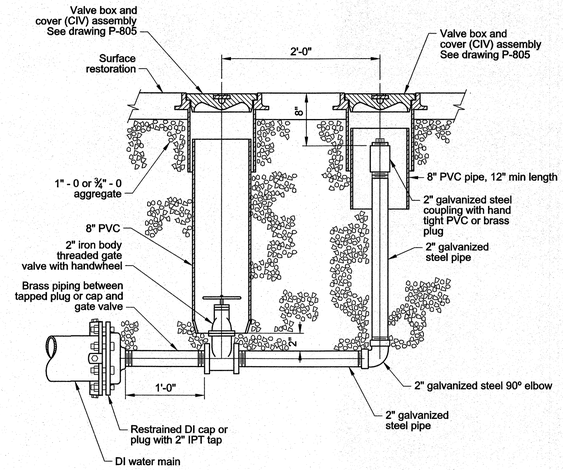

Note:

Notch PVC to sleeve over pipe and clear valve bonnet.

P-720

2" BLOW-OFF ASSEMBLY

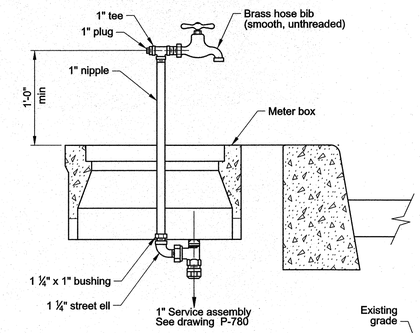

Temporary 1" Service Sample Point

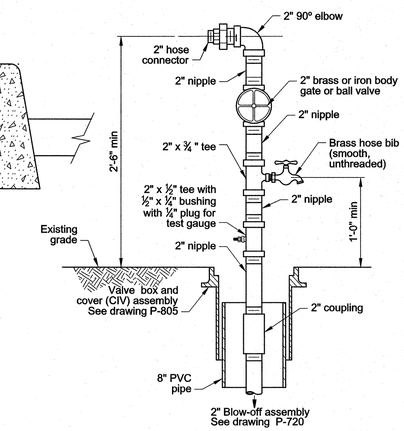

Temporary 2" Construction Test/Sample Riser

P-740

TEMPORARY TEST/SAMPLING POINT ASSEMBLIES

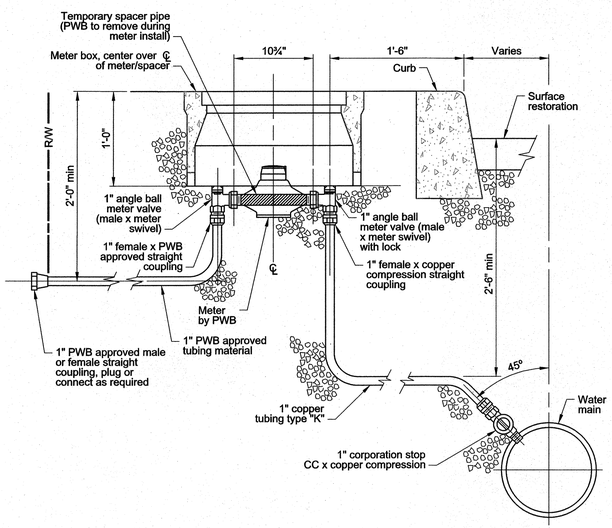

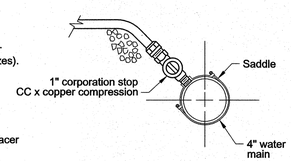

Notes:

1. Install service branches at right angles to the main, except in cul-de-sacs.
2. Service saddle required if water main is 4" diameter (optional on other sizes).
3. Meter and lock provided and installed by PWB.
4. Meter box and temporary spacer pipe provided by PWB.
5. Meter lengths are end of thread, does not include bushing.
6. Install temporary meter spacer pipe, angle ball meter valves and cap or connect per PWB.
7. Upstream angle ball meter valve to remain locked until PWB removes spacer pipe, lock and activates service.

P-780

1" SERVICE ASSEMBLY

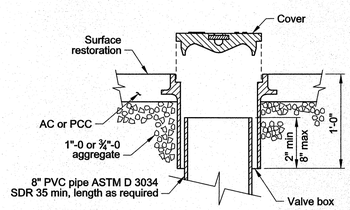

Type 1

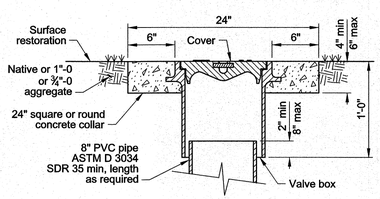

Type 2

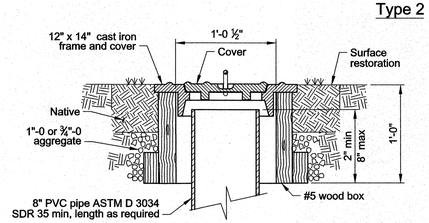

Type 3

Note:

Cast iron valve boxes, covers, frames and #5 wood box provided by PWB.

P-805

VALVE BOX & COVER (CIV) ASSEMBLY

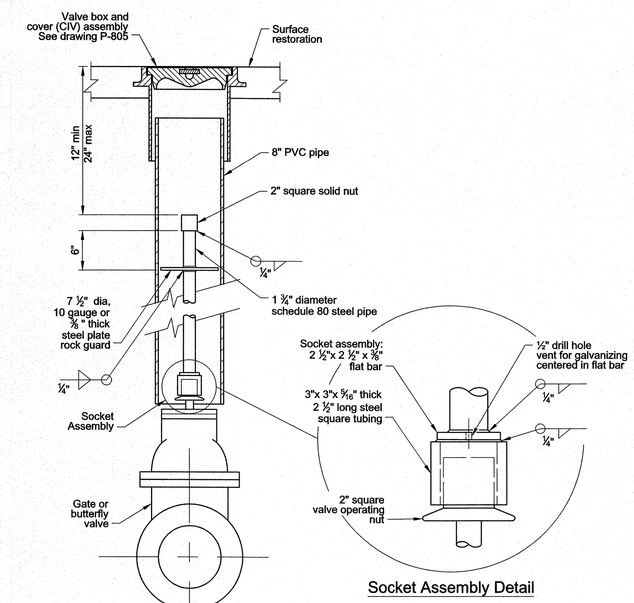

Socket Assembly Detail

Notes:

1. Install valve operator extension if top of valve operator nut is 48" or more below the proposed final grade.
2. Fabricate all valve operator extension components from A36 steel, center and square along the axis of the steel pipe. Hot-dip galvanize completed assembly after fabrication.

P-810

VALVE OPERATOR EXTENSION ASSEMBLY

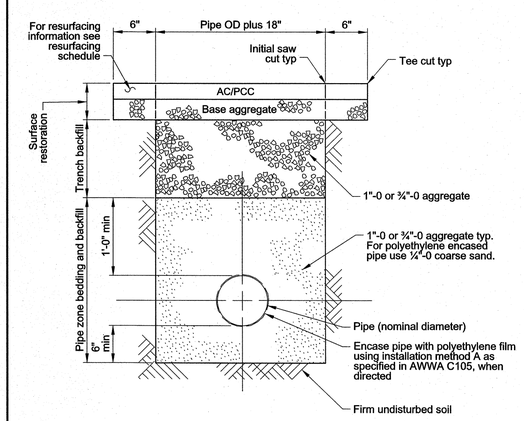

Notes:

1. For compaction requirements see project general notes and specifications.
2. For pipe diameter above 16", install as specified.

P-815

TYPICAL STREET TRENCH SECTION

No	Date	Description	Appd

Revision

Survey | Other

Designed By	JJ	Program Mgr	RAS
CAD Checked By	CMC	Const Mgr	RL
Checked By	DM	Const Supvr	MM
Project Mgr	DA	Date	

REGISTERED PROFESSIONAL ENGINEER 80179 OREGON JUNE 7, 2012 JONATHAN D. JOHNSON

EXPIRES 6-30-2019

PORTLAND WATER BUREAU

FROM FOREST TO FAUCET

Jodie A. Inman, Principal Engineer, PE No 61197

3/27/19 Date

CITY OF PORTLAND OREGON 1851

12" DI Main

NE 47th Ave (LID)

From NE Columbia Blvd To NE Crystal Ln

Standard Drawings

SAP Project No W02115

1/4 Section 2335

Sheet No 10 of 10

K:\Projects\W02100 - W02199\W02115_NE_47th_Ave_LID\W02115.dgn 10:01:16 AM 3/21/2019