DocuSign Envelope ID: 9B22F5A1-49FC-4403-BC38-B641BD7D8CBB

City of Portland Bureau of Transportation

Plans for Proposed Project

Grading, Drainage, Paving, Striping, Signing, Roadside Development,

S.E. Bush St. Sidewalk Infill

S.E. 103rd Ave. to S.E. 112th Ave.

Multnomah County
June 2022

Beginning of Project

Sta. 01+54.61

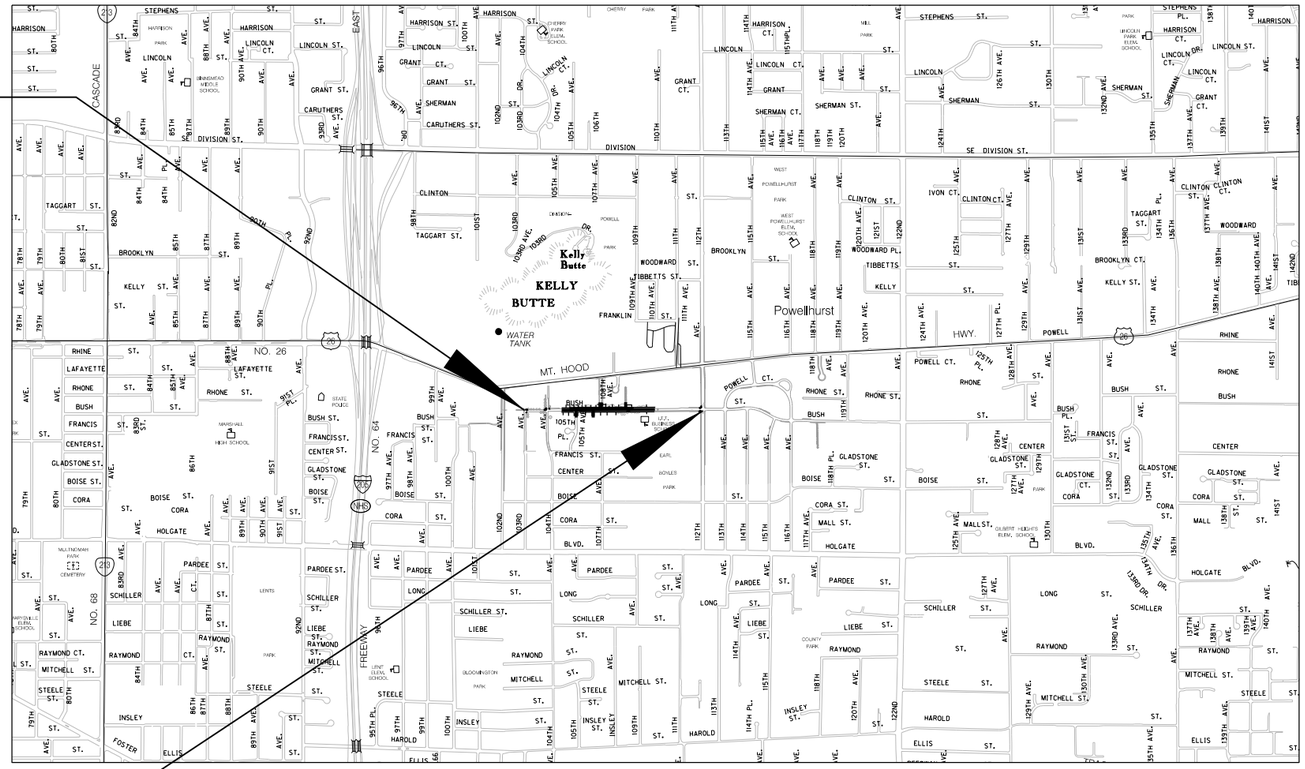

LOCATION MAP

0 1000 2000 3000 4000
FEET

End of Project

Sta. 09+30.560

Overall Length of Project - xx Miles

N

T. 1 N., R. 2 E., W.M.

NOTICE TO EXCAVATORS:
ATTENTION: OREGON LAW REQUIRES YOU TO FOLLOW RULES ADOPTED BY THE OREGON UTILITY NOTIFICATION CENTER. THOSE RULES ARE SET FORTH IN OAR 952-001-0010 THROUGH OAR 952-001-0090. YOU MAY OBTAIN COPIES OF THE RULES BY CALLING THE CENTER.
RULES ARE ALSO LOCATED AT WWW.DIGSAFELYOREGON.COM
NOTE: THE TELEPHONE NUMBER FOR THE OREGON UTILITY NOTIFICATION CENTER IS (503)-232-1987.

POTENTIAL UNDERGROUND FACILITY OWNERS

Dig Safely.

Website: http://www.callbeforeyoudig.org/
Call the Oregon One-Call Center
DIAL 811 or 1-800-332-2344

EMERGENCY TELEPHONE NUMBERS

NW NATURAL GAS	
M-F 7am-6pm	503-226-4211 Ext.4313
AFTER HOURS	503-226-4211
PGE	503-464-7777
CENTURYLINK	1-800-573-1311
BUREAU OF TRANS./MAINT. OPERATIONS	503-823-1700
CITY WATER	503-823-4874
VERIZON	1-800-483-1000

NO.	DATE	DESCRIPTION	APPD.

REVISION

DESIGNED BY	M. Goins, T. Knighton
CAD BY	C. Shearer
CHECKED BY	N. Blanchard
DATE APPROVED	May 2022
PBOT REVIEWER	N. Blanchard
PBOT SUPV.	J. Wilson

X REGISTERED PROFESSIONAL ENGINEER 63222PE OREGON JULY 9, 2001 NICOLE OTT BLANCHARD
Digital Signature
Expires 12/31/23

APPROVALS:

18PE

PBOT
PORTLAND BUREAU OF TRANSPORTATION
JO ANN HARDESTY, COMMISSIONER
STEVE TOWNSEN, P.E., CITY ENGINEER

CITY OF PORTLAND, OREGON 1851

S.E. Bush St. Sidewalk Infill
S.E. 103rd Ave. to S.E. 112th Ave.

Cover Sheet

1/4 SECTION: 3441, 3442
PROJECT NO.: T00948
SHEET NO.: 1

Plot Date: 5/27/2022 2:08:34 PM Filename: S:_II_Design_Safe Routes to Schools\T00948 - Bush,105th to 112th Avenue, SE\CAD\PLAN_SHEETS\SHT 01COVER\PLOT_SHT_01.dgn

DocuSign Envelope ID: 18BA504E-64BE-4A93-972E-097F6F46363C

INDEX OF SHEETS

SHEET NO.	DESCRIPTION
1	Cover Sheet
1A	Index Of Sheets
1B	Symbols And Abbreviations
1C	Sheet Layout Plan
2A	Typical Sections
2B	Construction Details
2C-1 thru 2C-15	Temporary Traffic Control Plan
2D-1 thru 2D-8	Erosion Control Plan
2E-1 thru 2E-12	Horizontal Alignment Plan
2F-1 thru 2F-8	Elevation Detail Plan
3	Street Plan - SE Woodstock Blvd. at SE 77th Ave.
3A	Street Profiles - SE Woodstock Blvd. at SE 77th Ave.
4	Street Plan - SE Foster Rd. at SE 77th and 78th Aves.
4A	Street Profiles - SE Foster Rd. at SE 77th and 78th Aves.
5	Street Plan - SE Holgate Blvd. at SE 79th Ave.
5A	Street Profiles - SE Holgate Blvd. at SE 79th Ave.
6	Street Plan - SE Holgate Blvd. at SE 80th Ave.
6A	Street Profiles - SE Holgate Blvd. at SE 80th Ave.
7	Street Plan - SE Powell Blvd. at SE 79th Ave.
8	Street Plan - SE Washington St. at SE 80th Ave.
8A	Street Profiles - SE Washington St. at SE 80th Ave.
9	Street Plan - SE Stark St. at SE 80th Ave.
9A	Street Profiles - SE Stark St. at SE 80th Ave.
10	Street Plan - NE Everett St. at NE 76th Ave.
10A	Street Profiles - NE Everett St. at NE 76th Ave.
10B	Street Profiles - NE Everett St. at NE 76th Ave.
11	Street Plan - NE Everett St. at NE 78th Ave.
11A	Street Profile - NE Everett St. at NE 78th Ave.
12	Street Plan - NE Halsey St. at NE 76th Ave.
12A	Street Profiles - NE Halsey St. at NE 76th Ave.
13	Street Plan - NE Tillamook St. at NE 72nd Ave.
13A	Street Profile - NE Tillamook St. at NE 72nd Ave.
14	Street Plan - NE 72nd Ave. - North of NE Tillamook St.
14A	Street Profiles - NE 72nd Ave. - North of NE Tillamook St.

INDEX OF SHEETS CONT'D.

SHEET NO.	DESCRIPTION
D-1	Stormwater Facilities Overview
D-2	Stormwater Plan - SE Woodstock Blvd. at SE 77th Ave.
D-2A	Stormwater Profiles - SE Woodstock Blvd. at SE 77th Ave.
D-3	Stormwater Plan - SE Foster Rd. at SE 78th Ave.
D-4	Stormwater Plan - SE Holgate Blvd. at SE 79th Ave.
D-4A	Stormwater Profile - SE Holgate Blvd. at SE 79th Ave.
D-5	Stormwater Plan - SE Holgate Blvd. at SE 80th Ave.
D-6	Stormwater Plan - SE Washington St. at SE 80th Ave.
D-7	Stormwater Plan - SE Stark St. at SE 80th Ave.
D-7A	Stormwater Profiles - SE Stark St. at SE 80th Ave.
D-8	Stormwater Plan - NE Everett St. at NE 76th Ave.
D-8A	Stormwater Profiles - NE Everett St. at NE 76th Ave.
D-9	Stormwater Plan - NE Everett St. at NE 78th Ave.
D-9A	Stormwater Profiles - NE Everett St. at NE 78th Ave.
D-10	Stormwater Plan - NE Halsey St. at NE 76th Ave.
D-10A	Stormwater Profile - NE Halsey St. at NE 76th Ave.
S-1 thru S-37	Permanent Signing and Striping Plan
S-38 thru S-40	Permanent Signing Legends
S-41 thru S-46	Sign and Post Data Table
S-47 and S-48	Sign and Post Data Table - Bike Guide
S-49	Bike Destination Sign Table
IL-1 thru IL-3	Illumination Legend and Details
IL-4 thru IL-19	Illumination Plan
TS-1	Legend Sheet
TS-2	Traffic Signal Modification Plan - SE Duke St. at SE 78th Ave.
TS-3	Traffic Signal Removal Plan - SE Foster Rd. at SE 78th Ave.
TS-4	Rectangular Rapid Flashing Beacon - SE Foster Rd & SE 78th Ave
TS-5	Rectangular Rapid Flashing Beacon - SE Washington St & SE 80th Ave
TS-6	Rectangular Rapid Flashing Beacon - SE Stark St & SE 80th Ave
TS-7	Rectangular Rapid Flashing Beacon - NE Glisan St & SE 78th Ave

Standard Drg. Nos.

P-101 - Pipe Bedding and Pipe Zone
P-150 - Precast Concrete Maintenance Hole
P-151 - Maintenance Hole Cast-in-Place Base & Precast Base Slab
P-160 - Precast Sump
P-161 - Sedimentation Maintenance Hole and Sed. Maint. Hole in Location of Extg. Sump
P-168 - Step for Precast Maintenance Hole
P-171 - Maintenance Hole Frame - 6-inch Depth
P-172 - Maintenance Hole Frame - 10-inch Depth
P-174 - Maintenance Hole Riser Ring
P-176 - Maintenance Hole Cover

P-420 - Street Name Sign Detail
P-435 - Pavement Markings Standard Detail Blocks

P-506 - Asphalt Concrete Pavement Repair Adjacent To Curb
P-507 - Manhole Frame Adjustment
P-518 - AC Pavement Trench Resurfacing On Busy Streets
P-528 - Typical Separated Sidewalk Driveway
P-536 - Driveway Connection Detail
P-540 - Curbs
P-544 - Miscellaneous Curb Details
P-547 - Midblock Sidewalk Ramp
P-548 - Sidewalk Ramp With Planter Strip Placement Options
P-550 - Sidewalk Corner Ramp With Concrete Gutter
P-551 - Sidewalks
P-555 - Islands
P-556 - Accessible Route Island
P-576 - Bike Rack
P-581 - Typical Street Tree Installation

RD363 - Gutter Transition at Inlet
RD365 - Frames & Grates for Concrete Inlets
RD364 - Concrete Inlets Type G-1, G-2, G-2M, & G-2MA
RD366 - Concrete Inlets Type CG-1, CG-2

RD722 - Sidewalk Joints and Transition Panels

RD902 - Detectable Warning Surface Details
RD932 - Combination Curb Ramp
RD938 - Combination Curb Ramp Single Ramp

RD1000 - Construction Entrances
RD1010 - Inlet Protection Type 2, 3, 6 and 7
RD1030 - Sediment Barrier

TM500 - Pavement Marking Standard Detail Blocks

60% DESIGN REVIEW
10/5/2022

INDEX OF SHEETS

SHEET NO.	DESCRIPTION
1	Cover Sheet
1A	Index Of Sheets
1B	Symbols And Abbreviations
2B	Construction Details
2D	Erosion Control Plan
2E	Horizontal Alignment Plan
2F	Elevation Detail Plan
3	Street Plan
3A	Street Profiles
D-1	Stormwater Plan
S-1	Permanent Signing & Striping Plan
S-2	Signing Legends
S-3	Sign and Post Data Table (To be included at 95% plans)
TS-1	Traffic Signal Legend
TS-2	SE 122nd Ave at Clinton St - Signalization Plan
TS-3	SE 122nd Ave at Clinton St - Wiring Plan

City Standard Drg. Nos.

P-101 - Pipe Bedding and Pipe Zone
P-505 - AC Pavement Trench Resurfacing On Local Streets
P-506 - Asphalt Concrete Pavement Repair Adjacent To Curb
P-518 - AC Pavement Trench Resurfacing On Busy Streets
P-528 - Typical Separated Sidewalk Driveway
P-540 - Curbs
P-544 - Miscellaneous Curb Details
P-547 - Midblock Curb Ramp
P-548 - Sidewalk Ramp with Furnishing Zone Placement Options
P-550 - Miscellaneous Curb Ramp Details
P-551 - Sidewalks

P-601 - Single Mast Arm Pole & Weld Details
P-602 - Combination Mast Arm Pole Details
P-604(A) - Mast Arm Pole Flange Plate Details
P-604(B) - Mast Arm Pole Base Plate Details
P-604(C) - Mast Arm Pole Recessed Terminal Cabinet
P-605 - Mast Arm Pipe Tenon Attachment and Luminaire Arm Details
P-607 - Signal Pole Footing & Anchor Bolts Type 2 & 3
P-610 - Base-Mounted Signal Post Footing & Type 332 Cabinet Foundation Details
P-612 - Signal Wiring Color Code
P-620 - "APS" Pushbutton Assembly
P-622 - Pedestrian Signal Mounting on Steel and Wood Poles
P-623 - Pedestrian Signal, Sensor, And Pushbutton on Frangibles, Ornamentals, and Pipe Posts
P-624 - Controller Cabinet and Communication Interface Details
P-625 - Service Installation on Steel and Wood Poles
P-627 - Signal Equipment Pole & Mast Arm Mounted Details
P-629 - Overhead Street Name and Aluminum Sign Mounting Details
P-632 - Pull Box Type A & B Details
P-633 - Communications Box Type C & D Details
P-671 - Street Lighting Service Cabinet Details

ODOT Standard Drg. Nos.

RD364 - Concrete Inlets Type G-1, G-2, G-2M, and G-2MA
RD365 - Frames & Grates for Concrete Inlets
RD366 - Concrete Inlets Type CG-1, CG-2

RD1010 - Inlet Protection Type 2, 3, 6, 7, 10 and 11

TM500 - Pavement Marking Standard Detail Blocks
TM501 - Pavement Marking Standard Detail Blocks
TM503 - Pavement Marking Standard Detail Blocks
TM840 - Closure Details
TM841 - Intersection Work Zone Details

Plot Date: 10/5/2022 10:11:53 AM Filename: \\pdotnt\grp$cds_IL_Design\T00646 - 122nd Ave Safety Improve Ph I\CAD\PLAN_SHEETS\SHT 01A INDEX OF SHEETS\PLOT_SHT_01A.dgn

NO.	DATE	DESCRIPTION	APPD.

REVISION

DESIGNED BY R. Bennett	DATE APPROVED Oct. 2022
CAD BY C. Shearer	PBOT REVIEWER X. Reviewer
CHECKED BY X. Engineer	PBOT SUPV. X. Eng-Supv

REGISTERED PROFESSIONAL ENGINEER 19043PE OREGON May 15, 1991 RUTHANNE BENNETT
Expires 12/31/23

APPROVALS:

ENGINEERING MANAGER, PE

STEVE TOWNSEN, CITY ENGINEER, 51538PE

PBOT
PORTLAND BUREAU OF TRANSPORTATION
JO ANN HARDESTY COMMISSIONER
STEVE TOWNSEN, P.E. CITY ENGINEER

CITY OF PORTLAND, OREGON 1851

122nd Ave Safety Improve, Ph I

Index of Sheets

1/4 SECTION 3343
PROJECT NO. T00646
SHEET NO. 1A

DocuSign Envelope ID: 9B22F5A1-49FC-4403-BC38-B641BD7D8CBB

LEGEND

Boundary

Proposed boundary, storm sewer drainage area or sump drainage area
Proposed boundary, stormwater facility drainage area

Rail

RLB Existing rail, buried
Existing rail, control box
Proposed rail, control box
Existing rail, crossing gate
Proposed rail, crossing gate
Existing/Proposed rail, signal
Existing/proposed rail, switch
RL Existing rail, track
RL Proposed rail, track

Road

Existing road, bike rack bench
Proposed road, bike rack bench
4+00 Existing road, control line
4+00 Proposed road, control line
Existing road, curb back
Proposed road, curb back
Existing road, curb extruded
Proposed road, curb extruded
Proposed road, directional flow arrow
EOP Existing road, edge asphalt
EOP Proposed road, edge asphalt
EOP Existing road, edge brick
EOP Proposed road, edge brick
EC Existing road, edge concrete
EC Proposed road, edge concrete
Existing road, driveway-ramp
Proposed road, driveway-ramp
EOG Existing road, edge gravel
EOG Proposed road, edge gravel
GR Existing road, guardrail
GR Proposed road, guardrail
WH WH Existing/proposed road gutter, weep hole
Existing road, gutter
Proposed road, gutter
Existing road, gutter lip
Proposed road, gutter lip
HR HR Existing/proposed road, horse ring
SL Existing/proposed road, light
M M Existing/proposed road, mail box
PK PK Existing/proposed road, parking meter
B B Existing/proposed road, post
SAW Existing road, saw cut line
SAW Proposed road, saw cut line
Existing road, sidewalk
Proposed road, sidewalk
Proposed road, sidewalk scoring line
Existing/proposed road, sign
S.W. Existing road, street name
Existing/proposed road, striping, "W" 4"white
Existing/proposed road, striping, "W-2" 8"white
Existing/proposed road, striping, "Y" 4"yellow
Existing/proposed road, striping, "WB" 4"white broken
Existing/proposed road, striping, "WB-P" 4"white broken
Existing/proposed road, striping, "YB" 4"yellow broken
Existing/proposed road, striping, "YB-P" 4"yellow broken
Existing/proposed road, striping, "NPL" no-pass lt 4"yellow
Existing/proposed road, striping, "NPL-P" no-pass lt 4"yellow
Existing/proposed road, striping, "NPR" no-pass rt 4"yellow
Existing/proposed road, striping, "NPR-P" no-pass rt 4"yellow
Existing/proposed road, striping, "TWL" two-way left turn 4"yellow
Existing/proposed road, striping, "TWL-P" two-way left turn 4"yellow
Existing/proposed road, striping, "WD" 4"white dotted
Existing/proposed road, striping, "WD-2" 8"white dotted
Existing/proposed road, striping, "YD" 4"yellow dotted

Road cont'd.

Existing/proposed road, striping, "LD" & "DLL-2" 8"white lane drop
Existing/proposed road, striping, "D" double no-pass two 4"yellow
Existing/proposed road, striping, "ND" narrow dbl no-pass two 4"yellow
Existing/proposed road, striping, "NDW"narrow dbl no lane change two 4"white
Existing/proposed road, striping, "S" stop bar 1' white bar (or single "CW")
Existing/proposed road, striping, "S-2" stop bar 2' white bar (or single "CW")
Existing/proposed road, striping, "CW-SC" staggered continental crosswalk 2' white bars
Existing/proposed road, striping, "CW-SC-P" staggered continental crosswalk 2' white bars
ONLY ONLY Existing/proposed road, striping symbols. Standard Stencils: "BS" Bike Lane, "BUS"Bus, "ON"Only, "HOV"Diamond, Arrows, Railroad xing/other
SF Existing road, sediment fence
SF Proposed road, sediment fence
Existing/Proposed road, truncated dome detectable warning surface
VG Existing road, valley gutter
VG Proposed road, valley gutter

Sewer

SWR Existing sewer combination, main
SWR Proposed sewer combination, main
CO CO Existing/proposed sewer sanitary, cleanout
SAN Existing sewer sanitary, main
SAN Proposed sewer sanitary, main
#4 Existing sewer sanitary, manhole text
S S Existing/proposed sewer sanitary, maintenance hole
Existing sewer storm, curb back
Proposed sewer storm, curb back
Existing sewer storm, grate
Proposed sewer storm, grate
Existing sewer storm, gutter
Proposed sewer storm, gutter
Existing/proposed sewer storm, inlet field
Existing/proposed sewer storm, inlet
IE=607.71 Existing sewer storm, inlet text
STM Existing sewer storm, main
STM Proposed sewer storm, main
ST ST Existing/proposed sewer storm, maintenance hole
SE SE Existing/proposed sewer storm, maintenance hole sed
#4 Existing sewer storm, maintenance hole text
SU SU Existing/proposed sewer storm, sump maintenance hole
#4 Existing sewer storm, sump maintenance hole text
Existing sewer storm, trash rack
Proposed sewer storm, trash rack

Structure

Existing structure, bridge
Proposed structure, bridge
Existing structure, building
Proposed structure, building
FIRST FLOOR ELEV 0.00 Existing structure, building elev text
Existing structure, column
Proposed structure, column
Existing structure, doorway
Proposed structure, doorway
Existing structure, fence
Proposed structure, fence

Structure cont'd.

Existing structure, gate
Proposed structure, gate
HR Existing str, handrail
HR Proposed str, handrail
Existing structure, stairs
Proposed structure, stairs
EW Existing structure, wall
EW Proposed structure, wall
Existing/proposed structure, yard light

Survey

7618 Existing survey, address numbers
BH BH Existing/proposed survey, benchmark
Existing/proposed survey, bore hole
CP 101 GPS 82 WP 904 RP 140 Existing survey, control point
Existing survey, clearance
Proposed survey, clearance
ESMT Existing survey, easement perm
ESMT Proposed survey, easement perm
TCE Existing survey, temp const easment
TCE Proposed survey, temp const easment
PSE Proposed survey, slope easement perm
SMTE Proposed survey, slope modification construction temporary easement
Existing survey, lot line
Proposed survey, lot line
Existing survey, monitor point
BS IR IP Existing survey, monument
1/2" IP TOP 0.00 Existing survey, monument text
Existing survey, pipe (top/inv. el.)
BLDG IE 0.00 DOOR Existing survey, point codes
614.64 Existing survey, point elevations
Existing survey, point markers
54030 Existing survey, point names
WOOD CURB Existing survey, point notes
Existing survey, resolved centerline
Existing survey, resolved R/W
Existing survey, R/W
Proposed survey, R/W

Topography

Existing topo, contour major
Proposed topo, contour major
Existing topo, contour minor
Proposed topo, contour minor
Existing topo, DTM boundary
Existing topo, DTM triangles
DCL Existing topo, ditch centerline
DCL Proposed topo, ditch centerline
Existing topo, edge rock
Proposed topo, edge rock
WL Existing topo, edge water
WL Proposed topo, edge water
Existing topo, edge wetland
Proposed topo, edge wetland
Existing topo, grade break
Proposed topo, grade break
TOE Existing topo, slope toe
TOE Proposed topo, slope toe
TOP Existing topo, slope top
TOP Proposed topo, slope top
Existing topo, spot elevation

Traffic

Existing traffic, control box
Proposed traffic, control box
J J Existing/proposed traffic, junction box
DONT WALK Existing/proposed traffic, pedestrian pole
Existing traffic, signal loop wire
Proposed traffic, signal loop wire
Existing/proposed traffic, signal pole base
Existing traffic, impact attenuator
Proposed traffic, impact attenuator

Utilities

TV Existing utility, CATV UG
TV Proposed utility, CATV UG
SP SP Existing/proposed utility, fiber optic standpipe
FO Existing utility, fiber optic UG
FO Existing utility, fiber optic UG
Existing utility, jet fuel UG
GM GM Existing/proposed utility, gas meter
G Existing utility, gas UG
G Proposed utility, gas UG
Existing utility, gas vault
Proposed utility, gas vault
GV GV Existing/proposed utility, gas valve
PP PP Existing/proposed utility, pole
Existing utility power anchor
Existing utility, power box
Proposed utility, power box
P P Existing/proposed utility, power maintenance hole
PM PM Existing/proposed utility, power meter
E Existing utility, power UG
E Proposed utility, power UG
Existing utility, power vault
Proposed utility, power vault
Proposed single/double ornamental street light pole
Existing/proposed utility, street light
T T Existing/proposed utility, telephone maintenance hole
T T Existing/proposed utility, telephone pedestal
TEL Existing utility, telephone UG
TEL Existing utility, telephone UG
FF Existing utility, unknown fuel filler
MH Existing utility, unknown maintenance hole
#4 Existing utility, unknown manhole text
UV Existing utility, unknown valve
Existing utility, unknown vault
E/O Existing utility, wire OH
E/O Proposed utility, wire OH

Vegetation

Existing vegetation, brush
Proposed vegetation, brush
Existing vegetation, drip line
Existing vegetation, edge
Proposed vegetation, edge
Existing vegetation, edge planter
Proposed vegetation, edge planter
LN Existing vegetation, lawn
LN Proposed vegetation, lawn
Existing/proposed vegetation, shrub
26" Dia 30' Spread Existing vegetation, text
Existing/proposed vegetation, tree

Water

FDC FDC Existing/proposed water, FDC
Existing/proposed water, fountain
Existing/proposed water, hydrant
Existing/proposed water, irrigation box
Existing/proposed water, irrigation sprinkler
IR Existing water, irrigation
IR Proposed water, irrigation
W Existing water, main
W Proposed water, main
W W Existing/proposed water, maintenance hole
WM WM Existing/proposed water, meter
SP SP Existing/proposed water, standpipe
Existing/proposed water, valve
Existing/proposed water, vault

ODOT/PBOT Inlets

Existing/proposed concrete inlet, type G-1 (RD364)
Existing/proposed concrete inlet, type G-2 (RD364)
Existing/proposed concrete inlet, type G-2M (RD364)
Existing/proposed concrete inlet, type G-2MA (RD364)
Existing/proposed concrete inlet, type CG-1 (RD366)
Existing/proposed concrete inlet, type CG-2 (RD366)
Existing/proposed concrete inlet, type CG-3 (RD372)
Existing/proposed field inlet (RD374)

BES Inlets

Existing/proposed concrete inlet (BES type Metal)
Existing/proposed concrete inlet (BES type Concrete)
Existing/proposed concrete inlet (BES type Beehive)
Existing/proposed concrete inlet (BES type Metal Modified)
Existing/proposed channel & grate inlet (BES type channel & grate)

SECTION & DETAIL IDENTIFICATION

Section Number
2 / 2A-2 — Sheet on which section is shown
Section 2 / 2A-2 — Sheet on which section is from
Typical Section Cut — Section drawing
Section Identification

Detail Letter
A / 2A-2 — Sheet on which detail is shown
Detail Letter — Detail Title A / 2A-2 — Sheet on which detail is from
See Detail A on sheet xx-x
Typical Detail Call-outs — Detail drawing
General Detail Identification

See Std. Drg. No. P-xxx
Standard Drawing No. P-xxx
Typical Detail Call-out — Detail drawing
City of Portland Standard Detail Identification

ABBREVIATIONS

AC	Asphaltic Concrete	Nom	Nominal
All	Alignment	Norm	Normal
Aggr	Aggregate	N	North
Appr	Approach	NE	Northeast
Approx	Approximate	NW	Northwest
Asph	Asphalt	NWE CO	Northwestern Energy
AP	As Painted	NTS	Not To Scale
ASTM	American Society of Testing Materials	No	Number
Ave	Avenue	OPS	Operations
Bkfl	Backfill	OL	Overhead Lines
BM	Bench Mark	ODOT	Oregon Department of Transportation
Bkwy	Bikeway	OF	Outfall
Bit	Bituminous	PNB	Pacific Northwest Bell Co.
BH	Bore Hole	PM	Parking Meter or Power Meter
Bott	Bottom	Pvmt	Pavement
Bdry	Boundary	Ped	Pedestrian
Br	Bridge	Perf	Perforated
Bldg	Building	Perm	Permanent
BES	Bureau of Environmental Services	Ph	Phase
BWW	Bureau of Water Works	PL	Place
CED	Curb Elevation Detail	Plt	Planter Tub
CL	Centerline or Clearance	P	Power or Signal Pole
CLSM	Concrete Low Strength Mix	PC	Point of Curvature
C-L FC	Chain-Link Fence	PCC	Portland Concrete Cement or Point Of Compound Curvature
CI	Cast Iron	PCR	Point Of Curb Return
CO	Clean Out or County	PGE	Portland General Electric
Comp	Compacted	PI	Point Of Intersection
Conc	Concrete	POVC	Point of Vertical Curve
Conn	Connection	PP	Power Pole
Const	Construct	PRC	Point of Reverse Curvature
Cont'd	Continued	PT	Point of Tangent
Cr	Creek	PT&T	Public Telephone & Telegraph
Xing	Crossing	PVC	Point of Vertical Curve or Polyvinyl Chloride
CP	Control Point	PVI	Point Of Vertical Intersection
CMP	Corrugated Metal Pipe	Lb	Pound
CSP	Concrete Sewer Pipe	PEP	Private Energy Partners
Crse	Course	Prof	Profile
CY	Cubic Yard	QC	Quarter Section Corner
Culv	Culvert	QWEST	Qwest Communications
D	Delta or Diameter	R	Radius
Dia	Diameter	RR	Railroad
Distr	Distribution	Ref	Reference
Dr	Drive or Drainage	Rebar	Reinforcing Bar, Steel
Dwy	Driveway	Reinf	Reinforce
Drg	Drawing	RCP	Reinforced Concrete Pipe
DS	Downspout	Reinst	Reinstall
Dwg	Drawing	Replace	Replacement
Esmt	Easement	Req'd	Required
E	East	Rev	Revise or Reverse
EB	Electric Box	RPT	Reference Point
Elec	Electric or Electrical	R/W	Right of Way
Elev	Elevation	RSR	Riser
Emb	Embankment	Rt	Right
Equa	Equation	Rdwy	Roadway
Exc	Excavation	RD	Roof Drain at Curb
Exist	Existing	Salv	Salvage
Ex	Extra	San	Sanitary
Exp	Exposure	Sec	Section
Ft	Feet, Foot or Font	Sed	Sedimentation
Fin	Finished	SC	Section Corner
FH	Fire Hydrant	Seg	Segment
FL	Flow Line	Swr	Sewer
FP	Flag Pole	Swk	Sidewalk
Fdtn	Foundation	S	Slope, Sewer or South
Frwy	Freeway	Sht	Sheet
FF	Fuel Filler Cap or Finished Floor	Shts	Sheets
Galv	Galvanized	Shldr	Shoulder
GAS	Gas Main	SE	Southeast
GM	Gas Meter	SW or sw	Southwest or Sidewalk
GS	Gas Standpipe	Sq Ft	Square Feet
GV	Gas Valve	Std	Standard
Gen	General	Sta	Station
gb	Grade Break	Steam	Steam Pressurized Utility
GR	Guardrail	Stl	Steel
g	Gutter Elevation	SS	Storm Sewer
GA	Guy Anchor	SL	Street Light or Slope
GP	Guy Pole	St	Street
H	Height	Str	Structure of Strength
HDPE	High-density polyethylene	Surf	Surfacing
HMAC	Hot-Mixed Asphalt Concrete	SU	Sump
Horiz	Horizontal	T	Tangent Length or Telephone
HR	Horse Ring	TB	Telephone Booth, Tel. Box or Traffic Box
Hwy	Highway	tcd	Top of Check Dam
Incl	Include	Tel	Telephone
Inst	Install	Temp	Temporary
IE	Invert Elevation	TBM	Temporary Bench Mark
IR	Iron Rod	TCI	Telecommunications Inc.
Irrig	Irrigation	Ter	Terrace
Jct	Junction	Thkn	Thickness
J	Junction Box	tc or TC	Top of Curb, or Traffic Control
K	Kelvin	TP	Top of Pavement or Telephone Pole
KM	Kilometer	TCP	Topographic Control Points or Traffic Control Plan
Lft	Left	Topo	Topography
Lv	Level	Tracks	Tracks, Buried Streetcar
LP	Light Pole	Tr	Trench
Lin	Linear	TV	Television
Loc	Location	Typ	Typical
L	Loop	U	Unknown
Lum	Luminaire	UG	Underground
MH	Maintenance hole	UV	Unknown Valve
Matl	Material	UVC	Unknown Vertical Conduit
Med	Median	Var	Varies of Variable
M	Meter	Vert	Vertical
Max	Maximum	W	West, Width or Water
Mbx	Mailbox	WATER	Water Main
Mhr	Metal Handrail	WF	Water Faucet or Hose Bibb
MHMAC	Minor Hot Mixed Asphalt Concrete	WM	Water Meter or Water Main
Min	Minimum	WT	Water Tower or Weight
Mix	Mixture	WV	Water Valve
Mod	Modified	Yd	Yard
Mult	Multiple		
MWMAC	Minor Warm-Mixed Asphalt Concrete		

NO.	DATE	DESCRIPTION	APPD.
		REVISION	

DESIGNED BY	M. Goins, T. Knighton	DATE APPROVED	May 2022
CAD BY	C. Shearer	PBOT REVIEWER	N. Blanchard
CHECKED BY	N. Blanchard	PBOT SUPV.	J. Wilson

REGISTERED PROFESSIONAL ENGINEER 63222PE OREGON JULY 9, 2001 NICOLE OTT BLANCHARD
Digital Signature
Expires 12/31/23

APPROVALS:

PBOT
PORTLAND BUREAU OF TRANSPORTATION
JO ANN HARDESTY — COMMISSIONER
STEVE TOWNSEN, P.E. — CITY ENGINEER

CITY OF PORTLAND, OREGON 1851

S.E. Bush St. Sidewalk Infill
S.E. 103rd Ave. to S.E. 112th Ave.

Symbols and Abbreviations

1/4 SECTION 3441, 3442
PROJECT NO. T00948
SHEET NO. 1B

Plot Date: 5/27/2022 2:08:38 PM Filename: S:_II_Design_Safe Routes to Schools\T00948 - Bush, 105th to 112th Avenue, SE\CAD\PLAN_SHEETS\SHT 01B SYMBOLS AND ABBREVIATIONS\PLOT_SHT_01B.dgn

DocuSign Envelope ID: 9B22F5A1-49FC-4403-BC38-B641BD7D8CBB

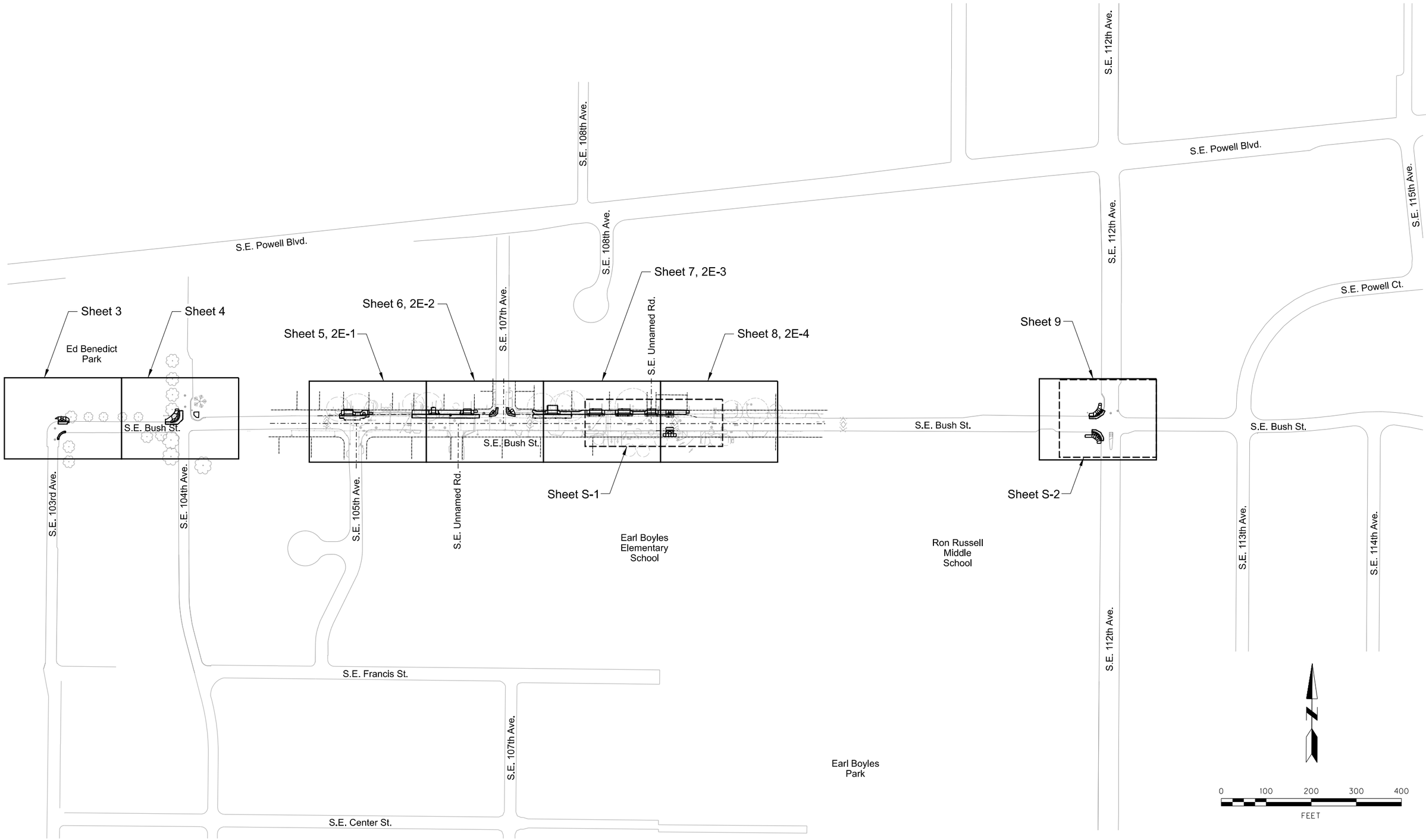

Plot Date: 5/27/2022 2:08:54 PM Filename: S:_II_Design_Safe Routes to Schools\T00948 - Bush_105th to 112th Avenue, SE\CAD\PLAN_SHEETS\SHT OIC PLAN SHEET LAYOUT\PLOT_SHT_OIC.dgn

NO.	DATE	DESCRIPTION	APPD.

REVISION

DESIGNED BY M. Goins T. Knighton	DATE APPROVED May 2022
CAD BY C. Shearer	PBOT REVIEWER N. Blanchard
CHECKED BY N. Blanchard	PBOT SUPV. J. Wilson

X REGISTERED PROFESSIONAL ENGINEER 63222PE OREGON JULY 9, 2001 NICOLE OTT BLANCHARD
Digital Signature
Expires 12/31/23

APPROVALS:

18PE

PBOT
PORTLAND BUREAU OF TRANSPORTATION
JO ANN HARDESTY COMMISSIONER
STEVE TOWNSEN, P.E. CITY ENGINEER

CITY OF PORTLAND, OREGON 1851

S.E. Bush St. Sidewalk Infill
S.E. 103rd Ave. to S.E. 112th Ave.

Sheet Layout Plan

1/4 SECTION 3441, 3442
PROJECT NO. T00948
SHEET NO. 1C

DocuSign Envelope ID: 9B22F5A1-49FC-4403-BC38-B641BD7D8CBB

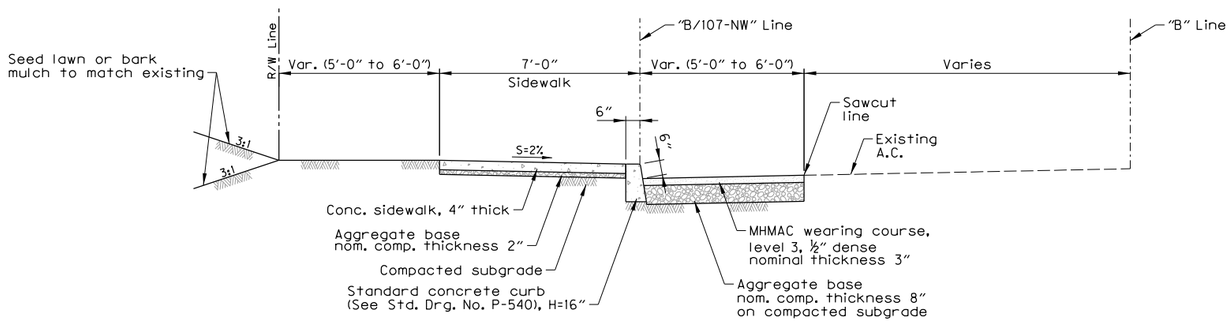

S.E. Bush St. at S.E. 105th Ave.

Sta. "B" 1+54.64 to Sta. "B" 1+83.89 (Taper Section)
Sta. "B" 1+83.89 to Sta. "B" 2+01.82
Sta. "B" 2+01.82 to Sta. "B" 2+20.01 (Transition Section)

Typical Section (1/3)
Scale: 3/8" = 1'-0"

Filename: S:_II_Design_Safe Routes to Schools\T00948 - Bush,105th to 112th Avenue,SE\CAD\PLAN_SHEETS\SHT 02A-01TYPICAL SECTIONS\PLOT_SHT_02A-01.dgn

Plot Date: 5/27/2022 2:09:01PM

WARNING
0 ½ 1
IF THIS BAR DOES NOT MEASURE 1" THEN DRAWING IS NOT TO SCALE.

NO.	DATE	DESCRIPTION	APPD.
		REVISION	

DESIGNED BY M. Goins T. Knighton
CAD BY C. Shearer
CHECKED BY N. Blanchard
DATE APPROVED May 2022
PBOT REVIEWER N. Blanchard
PBOT SUPV. J. Wilson

REGISTERED PROFESSIONAL ENGINEER 63222PE OREGON JULY 9, 2001 NICOLE OTT BLANCHARD
X Digital Signature
Expires 12/31/23

APPROVALS:
18PE

PBOT
PORTLAND BUREAU OF TRANSPORTATION
JO ANN HARDESTY COMMISSIONER
STEVE TOWNSEN, P.E. CITY ENGINEER

CITY OF PORTLAND, OREGON 1851

S.E. Bush St. Sidewalk Infill
S.E. 103rd Ave. to S.E. 112th Ave.

Typical Sections

T/4 SECTION 3441, 3442
PROJECT NO. T00948
SHEET NO. 2A-1

DocuSign Envelope ID: 9B22F5A1-49FC-4403-BC38-B641BD7D8CBB

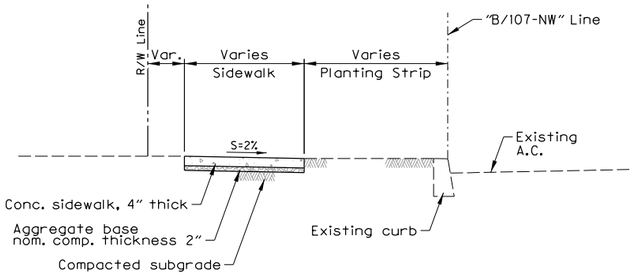

Sta. "B" 4+52.65 to Sta. "B" 4+60.80
Sta. "B" 9+24.07 to Sta. "B" 9+30.56

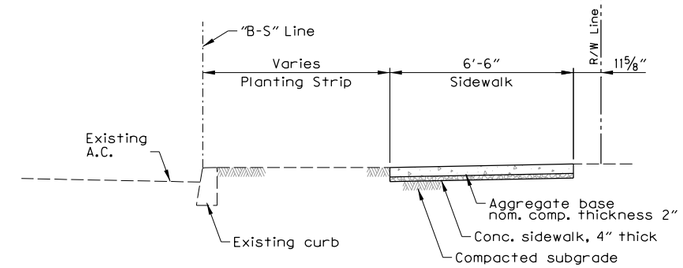

Sta. "B" 8+73.03 to Sta. "B" 8+79.07
Sta. "B" 8+96.04 to Sta. "B" 9+02.03

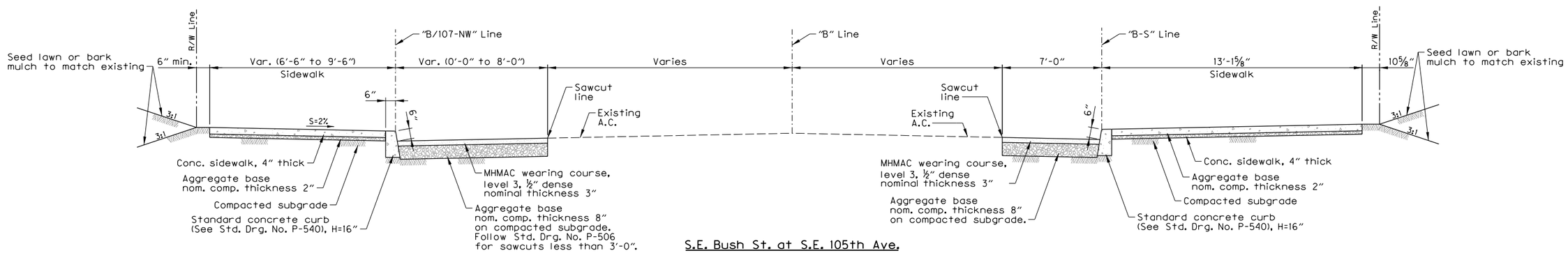

Sta. "B" 3+15.67 to Sta. "B" 4+52.65
Sta. "B" 5+86.44 to Sta. "B" 9+24.07

S.E. Bush St. at S.E. 105th Ave.

Typical Section (2 / 3-6)
Scale: ⅜" = 1'-0"

Sta. "B" 8+79.07 to Sta. "B" 8+96.04

WARNING
0 ½ 1
IF THIS BAR DOES NOT MEASURE 1" THEN DRAWING IS NOT TO SCALE.

NO.	DATE	DESCRIPTION	APPD.
		REVISION	

DESIGNED BY M. Goins, T. Knighton
CAD BY C. Shearer
CHECKED BY N. Blanchard
DATE APPROVED May 2022
PBOT REVIEWER N. Blanchard
PBOT SUPV. J. Wilson

X REGISTERED PROFESSIONAL ENGINEER 63222PE OREGON JULY 9, 2001 NICOLE OTT BLANCHARD
Digital Signature
Expires 12/31/23

APPROVALS:
18PE

PBOT
PORTLAND BUREAU OF TRANSPORTATION
JO ANN HARDESTY COMMISSIONER
STEVE TOWNSEN, P.E. CITY ENGINEER

CITY OF PORTLAND, OREGON 1851

S.E. Bush St. Sidewalk Infill
S.E. 103rd Ave. to S.E. 112th Ave.

Typical Sections

1/4 SECTION 3441, 3442
PROJECT NO. T00948
SHEET NO. 2A-2

Plot Date: 5/27/2022 2:09:10 PM Filename: S:_II_Design_Safe Routes to Schools\T00948 - Bush,105th to 112th Avenue,SE\CAD\PLAN_SHEETS\SHT 02A-02 TYPICAL SECTIONS\PLOT_SHT_02A-02.dgn

DocuSign Envelope ID: C9B851AA-A434-4F90-8CBF-10BAB1F1724C

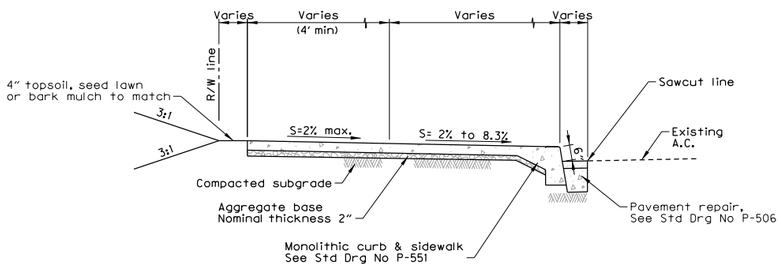

Section

Monolithic Curb and Sidewalk

Scale: 3/8" = 1'-0"

A / 3 thru 55

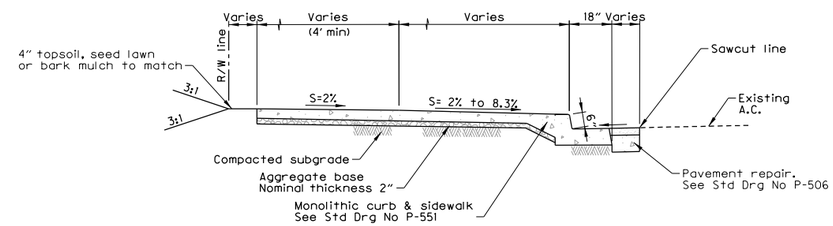

Section

Monolithic Curb Gutter and Sidewalk

Scale: 3/8" = 1'-0"

B / 3-55

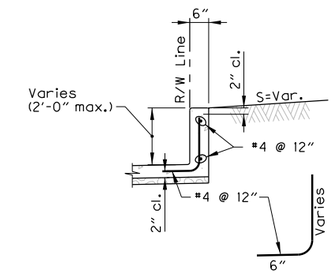

Section

Sidewalk and Wall, Reinforced

Scale: 1/2" = 1'-0"

E / -

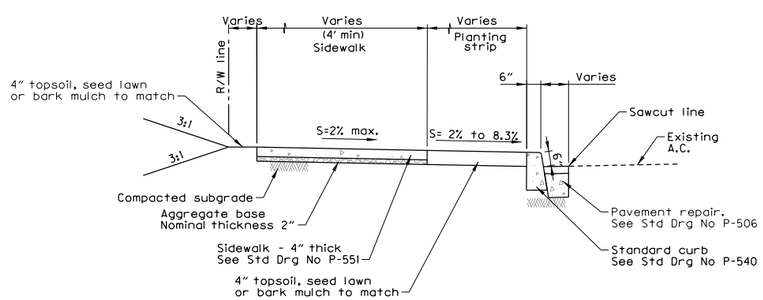

Section

Standard Curb and Separated Sidewalk

Scale: 3/8" = 1'-0"

C / 3-55

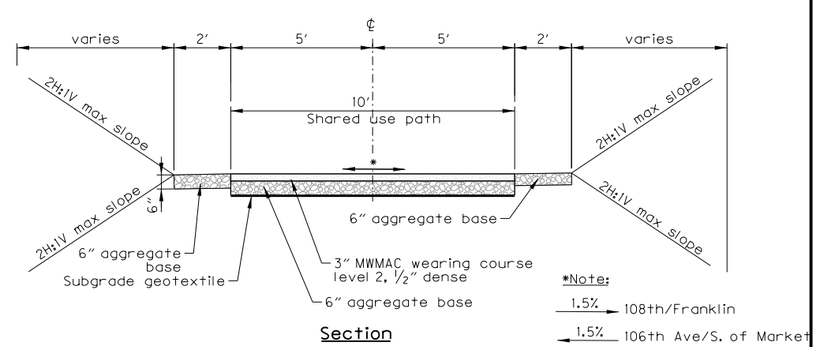

Section

Asphalt Path

Scale: 3/8" = 1'-0"

D / -

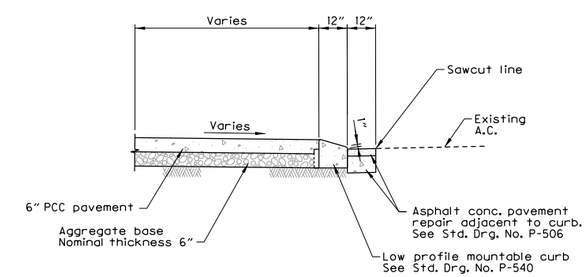

Section

Mountable Island

Scale: 3/8" = 1'-0"

F / 27,40

WARNING
0 1/2 1
IF THIS BAR DOES NOT MEASURE 1" THEN DRAWING IS NOT TO SCALE.

NO.	DATE	DESCRIPTION	APPD.

REVISION

DESIGNED BY	DATE APPROVED	
N. Robinson	May 2020	
CAD BY	DIV. ENGINEER	PROJECT NO.
D. Ramer	S. Townsen	T00455
CHECKED BY		1/4 SECTION
J. Grassman		28,29,30,31,32,33,3441 3242-3246 2845-3146

FEDERAL ID PROJECT NUMBER
STP-5900 (292)

X
REGISTERED PROFESSIONAL ENGINEER 16070PE OREGON JULY 21, 1992 NEAL D. ROBINSON
Digitally Signed
Expires 12/31/20

APPROVALS:
ENGR. NO. 84470PE
ENGR. NO. 51538PE

PBOT
PORTLAND BUREAU OF TRANSPORTATION
CHLOE EUDALY — COMMISSIONER
STEVE TOWNSEN, P.E. — CITY ENGINEER

CITY OF PORTLAND, OREGON 1851

East Portland Access to Employment and Education
MULTNOMAH COUNTY

Construction Details

SHEET NO. 2B

Filename: S:_II_Design\T00455 - E. Portland Access to Employment & Education (EPAEE)\CAD\PLAN_SHEETS\SHT 02B-01CONSTRUCTION DETAILS\PLOT_SHT_02B-01.dgn
Plot Date: 5/13/2020 7:31:44 AM

DocuSign Envelope ID: 4DFD203A-1E97-4E5F-A086-655426F65308

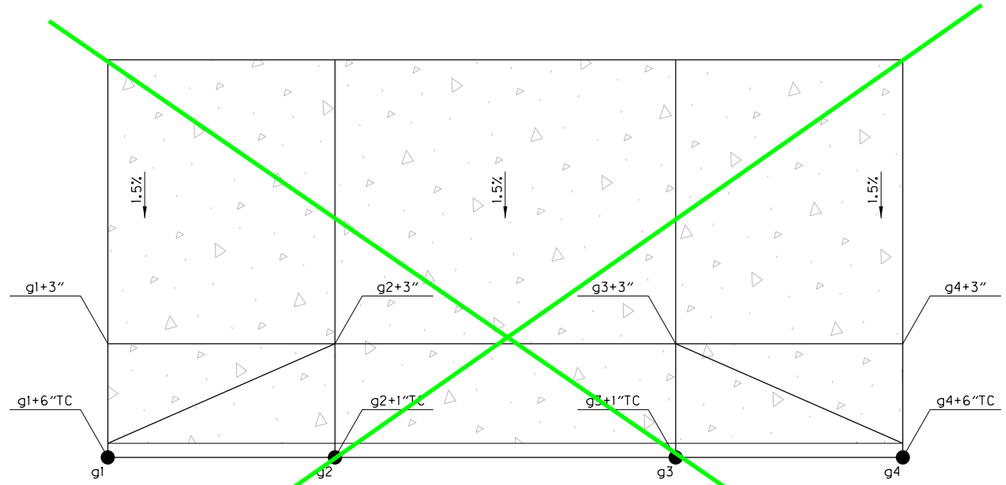

Plan

Typical Driveway Detail (A / 3-12)

Not to Scale

Remove this detail from the example plans

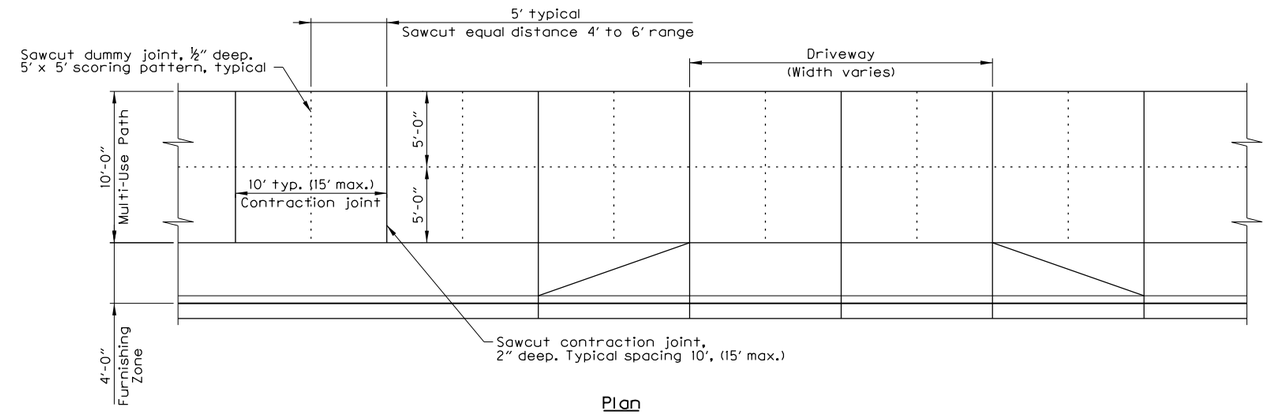

Plan

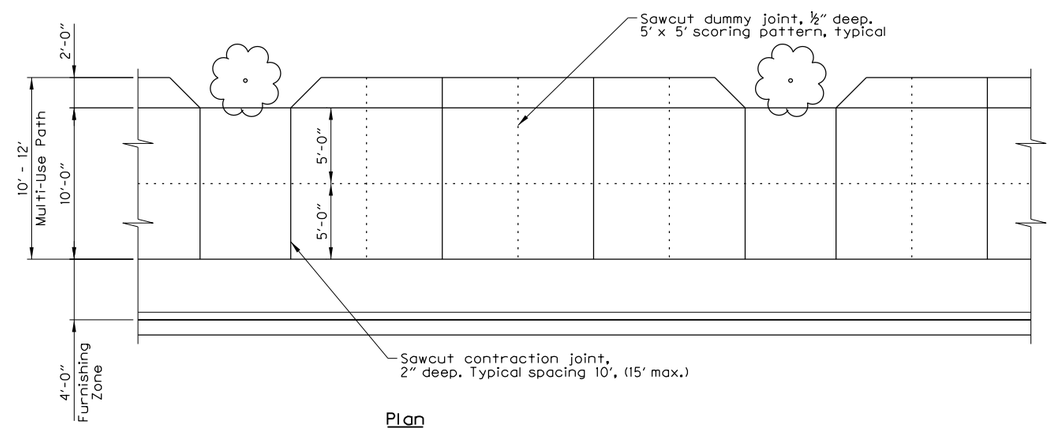

Plan

Multi-Use Path Scoring (D / 3-12)

Not to Scale

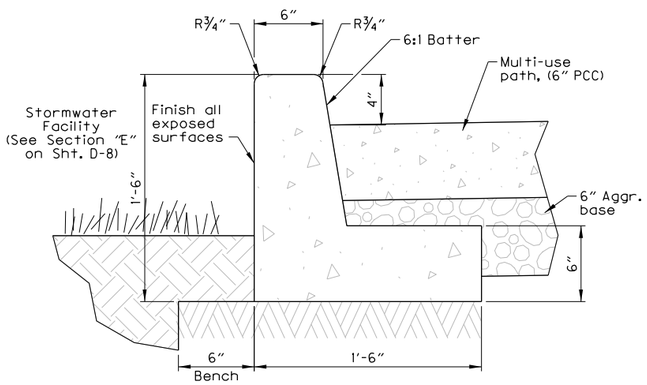

Section

Stormwater Planter Wall Adjacent to Asphalt Multi-Use Path (B / 3-12)

Scale: 2" = 1'-0"

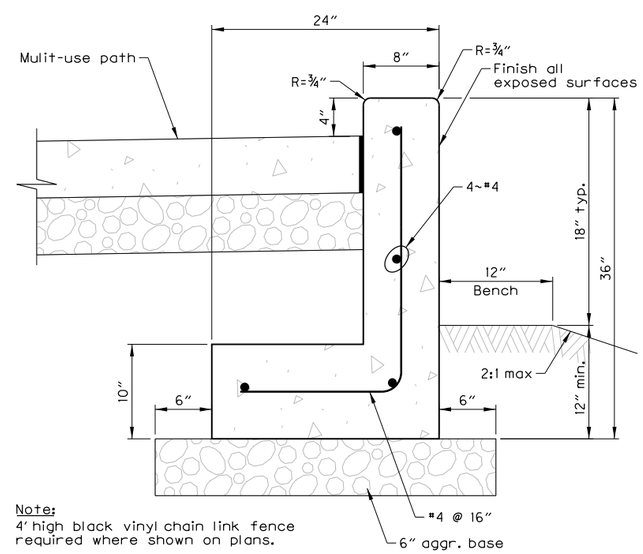

Note:
4' high black vinyl chain link fence required where shown on plans.

Section

Reinforced Concrete Curb Wall (C / 3-12)

Not to Scale

NO.	DATE	DESCRIPTION	APPD.

REVISION

DESIGNED BY	DATE APPROVED
N. Blanchard	May 2019
CAD BY C. Shearer	DIV. ENGINEER S. Townsen
CHECKED BY K. Roske	

X REGISTERED PROFESSIONAL ENGINEER 63222PE OREGON JULY 9, 2001 NICOLE OTT BLANCHARD

Digital Signature

Expires 12/31/2019

APPROVALS:

REG. PROF. ENGR. NO. 84470PE

REG. PROF. ENGR. NO. 51538PE

PBOT PORTLAND BUREAU OF TRANSPORTATION

DAN SALTZMAN COMMISSIONER

STEVE TOWNSEN, P.E. CITY ENGINEER

CITY OF PORTLAND OREGON 1851

N.E. 47th Ave: N.E. Columbia Blvd. - N.E. Cornfoot Rd.

Construction Details

1/4 SECTION 2841,2842 2941,2942

PROJECT NO. PBOT T00539 BES E10853

SHEET NO. 2B-1

Plot Date: 5/10/2019 1:12:53 PM Filename: S:_JL_Design\T00539 - NE 47th Ave LID - Columbia Blvd - Cornfoot Rd\CAD\PLAN_SHEETS\SHT 02B-01CONSTRUCTION DETAILS\PLOT_SHT_02B-01.dgn

DocuSign Envelope ID: 4DFD203A-1E97-4E5F-A086-655426F65308

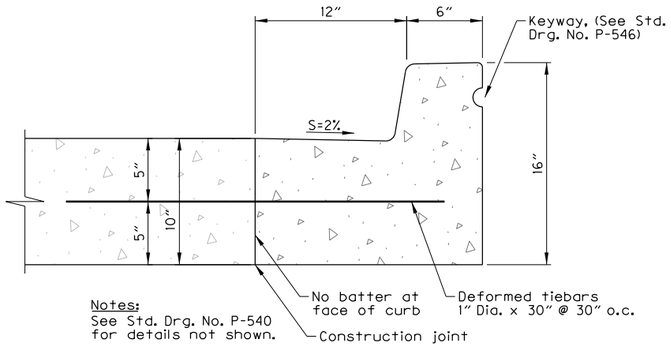

Notes:
See Std. Drg. No. P-540 for details not shown.

Modified Concrete Curb & Gutter with Tied Construction Joint (A / 2A)

Scale: 2″ = 1′-0″

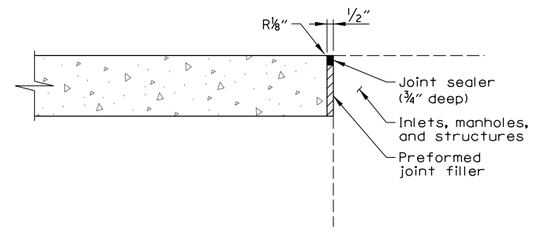

Section

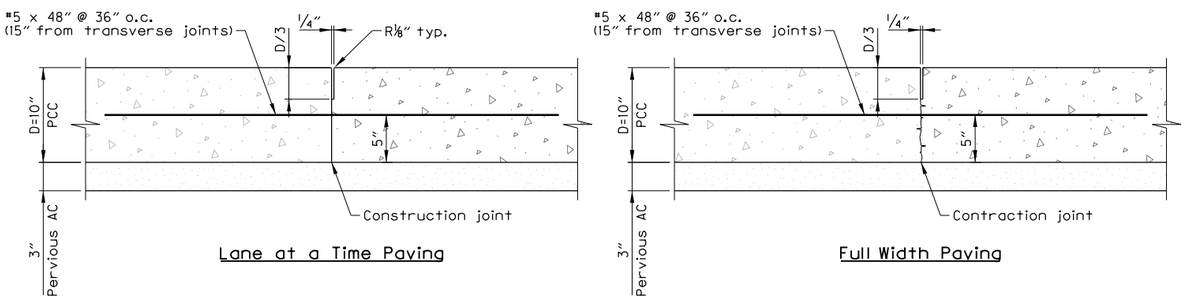

Longitudinal Joint (B / -)

Scale: 1½″ = 1′-0″

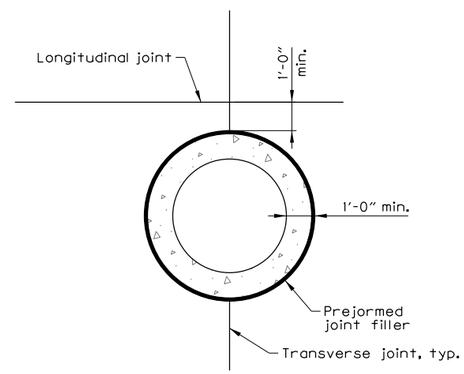

Manhole Isolation Joint

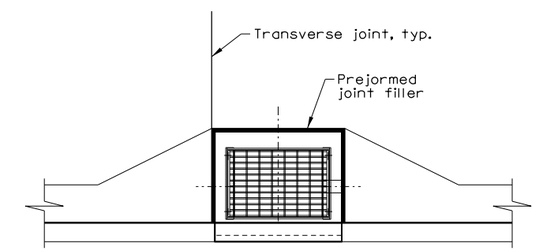

Inlet Isolation Joint

Isolation Joint (D / -)

Not to Scale

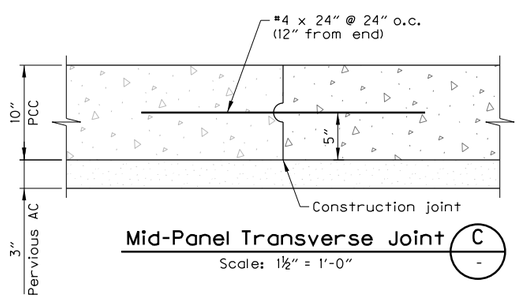

Mid-Panel Transverse Joint (C / -)

Scale: 1½″ = 1′-0″

Plot Date: 5/10/2019 1:2:54 PM Filename: S:_ll_Design\T00539 - NE 47th Ave LID - Columbia Blvd - Cornfoot Rd\CAD\PLAN_SHEETS\SHT 02B-02 CONSTRUCTION DETAILS\PLOT_SHT_02B-02.dgn

NO.	DATE	DESCRIPTION	APPD.
		REVISION	

DESIGNED BY N. Blanchard	DATE APPROVED May 2019
CAD BY C. Shearer	DIV. ENGINEER S. Townsen
CHECKED BY K. Roske	

X REGISTERED PROFESSIONAL ENGINEER 63222PE OREGON JULY 9, 2001 NICOLE OTT BLANCHARD
Digital Signature
Expires 12/31/2019

APPROVALS:
REG. PROF. ENGR. NO. 84470PE
REG. PROF. ENGR. NO. 51538PE

PBOT PORTLAND BUREAU OF TRANSPORTATION
DAN SALTZMAN COMMISSIONER
STEVE TOWNSEN, P.E. CITY ENGINEER

CITY OF PORTLAND OREGON 1851

N.E. 47th Ave: N.E. Columbia Blvd. - N.E. Cornfoot Rd.

Construction Details

1/4 SECTION 2841,2842 2941,2942
PROJECT NO. PBOT T00539 BES E10853
SHEET NO. 2B-2

DocuSign Envelope ID: 4DFD203A-1E97-4E5F-A086-655426F65308

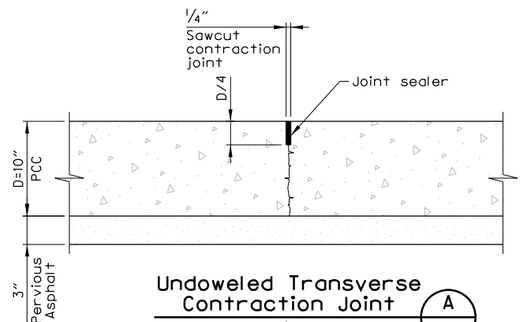

Undoweled Transverse Contraction Joint (A)

Scale: 1½" = 1'-0"

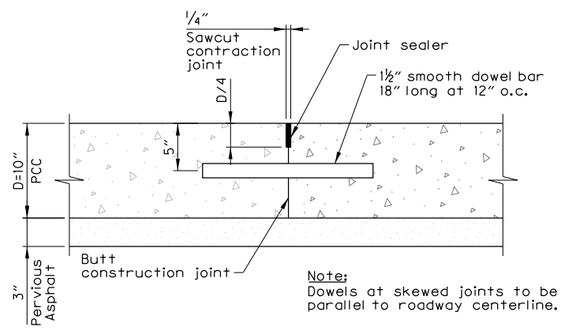

Note:
Dowels at skewed joints to be parallel to roadway centerline.

Doweled Transverse Contraction Joint (B)

Scale: 1½" = 1'-0"

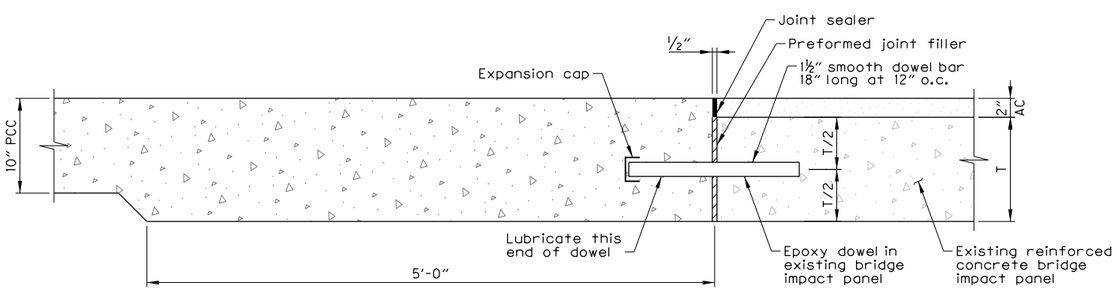

Note:
Dowels at skewed joints to be parallel to roadway centerline.

Transverse Expansion Joint at Bridge (C)

Scale: 1½" = 1'-0"

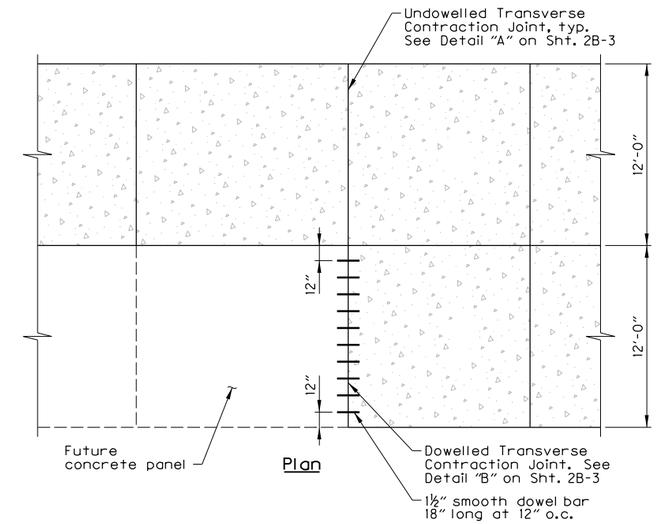

Planned Butt Joint, Typ. (D)

Not to Scale

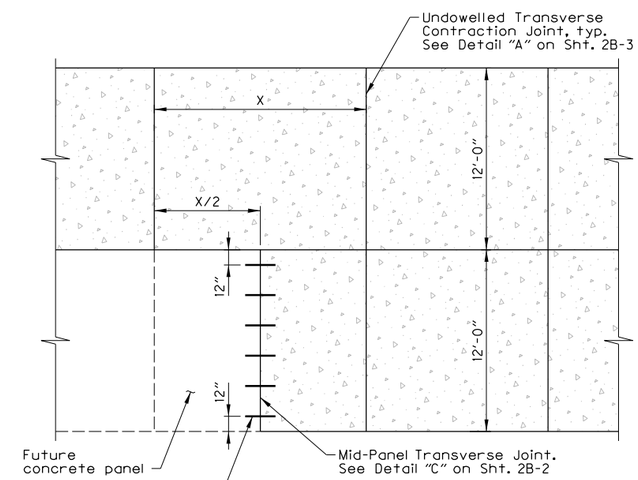

Note:
Preapproval required for Mid-Panel Joints.
Planned Butt Joint to be used, typical.

Mid-Panel Transverse Joints (E)

Not to Scale

NO.	DATE	DESCRIPTION	APPD.

REVISION

DESIGNED BY N. Blanchard	DATE APPROVED May 2019
CAD BY C. Shearer	DIV. ENGINEER S. Townsen
CHECKED BY K. Roske	

X REGISTERED PROFESSIONAL ENGINEER 63222PE OREGON JULY 9, 2001 NICOLE OTT BLANCHARD
Digital Signature
Expires 12/31/2019

APPROVALS:
REG. PROF. ENGR. NO. 84470PE
REG. PROF. ENGR. NO. 51538PE

PBOT
PORTLAND BUREAU OF TRANSPORTATION
DAN SALTZMAN — COMMISSIONER
STEVE TOWNSEN, P.E. — CITY ENGINEER

CITY OF PORTLAND, OREGON 1851

N.E. 47th Ave: N.E. Columbia Blvd. - N.E. Cornfoot Rd.

Construction Details

1/4 SECTION 2841,2842 2941,2942
PROJECT NO. PBOT T00539 BES E10853
SHEET NO. 2B-3

Plot Date: 5/10/2019 12:55 PM Filename: S:_IL_Design\T00539 - NE 47th Ave LID - Columbia Blvd - Cornfoot Rd\CAD\PLAN_SHEETS\SHT 02B-03 CONSTRUCTION DETAILS\PLOT_SHT_02B-03.dgn

PRELIMINARY REVIEW
9/21/2022

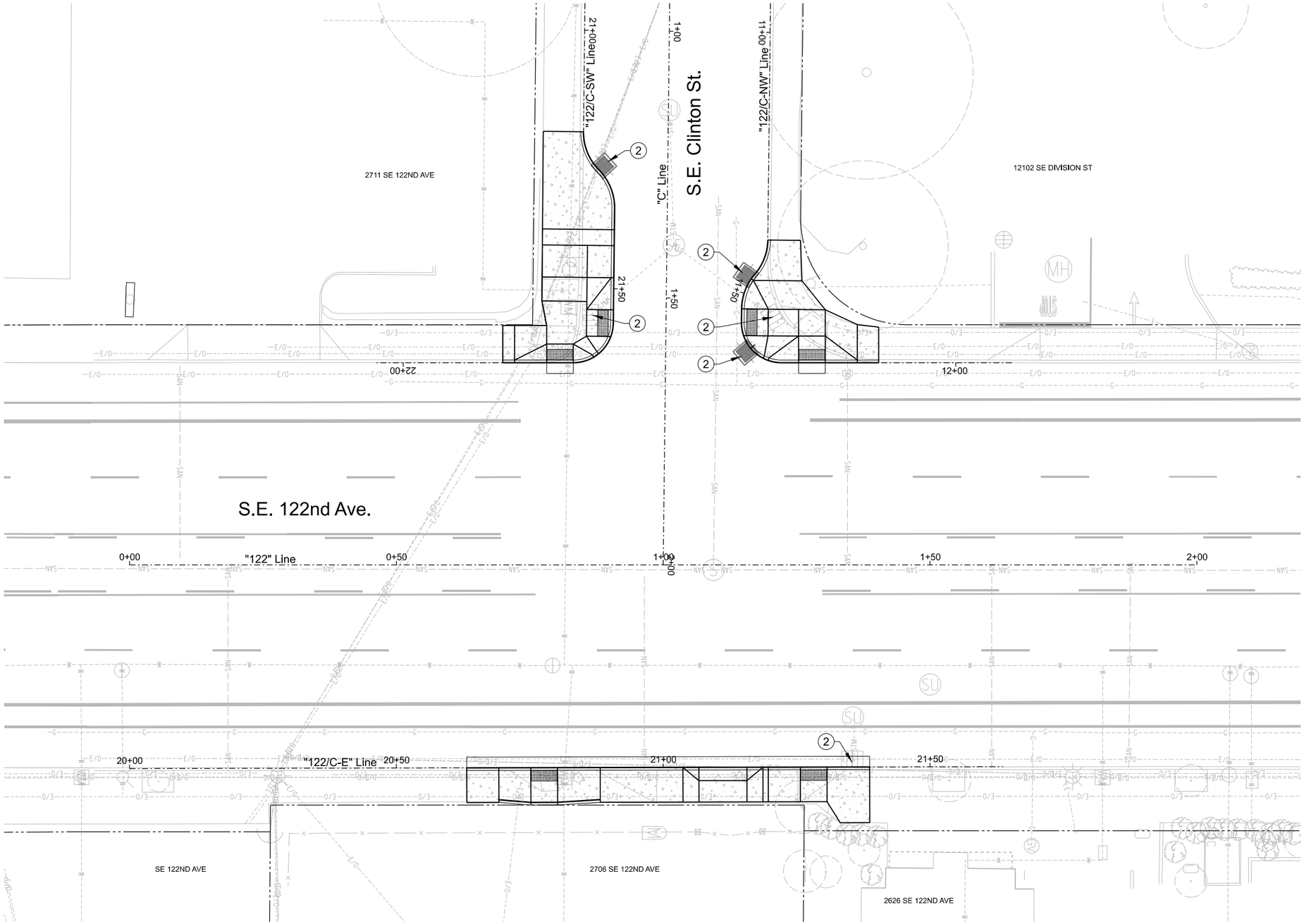

Construction Notes

2 Install Type 3 inlet protection - 6. See Std. Drg. No. RD1010.

0 10 20 30 40
FEET

NO.	DATE	DESCRIPTION	APPD.

REVISION

DESIGNED BY R. Bennett	DATE APPROVED Sept. 2022
CAD BY C. Shearer	PBOT REVIEWER X. Reviewer
CHECKED BY X. Engineer	PBOT SUPV. X. Eng-Supv

REGISTERED PROFESSIONAL ENGINEER 19043PE OREGON May 15, 1997 RUTHANNE BENNETT
Expires 12/31/23

APPROVALS:

ENGINEERING MANAGER, PE

STEVE TOWNSEN, CITY ENGINEER, 51538PE

PBOT
PORTLAND BUREAU OF TRANSPORTATION
JO ANN HARDESTY COMMISSIONER
STEVE TOWNSEN, P.E. CITY ENGINEER

CITY OF PORTLAND OREGON 1851

122nd Ave Safety Improve, Ph I

Erosion Control Plan

1/4 SECTION *3343*
PROJECT NO. *T00646*
SHEET NO. *2D*

Plot Date: 9/21/2022 6:44:01 AM Filename: \\pdotnt\grp$cds_IL Design\T00646 - I22nd Ave Safety Improve Ph I\CAD\PLAN_SHEETS\SHT 02D EROSION CONTROL PLAN\PLOT_SHT_02D.dgn

DocuSign Envelope ID: 4DFD203A-1E97-4E5F-A086-655426F65308

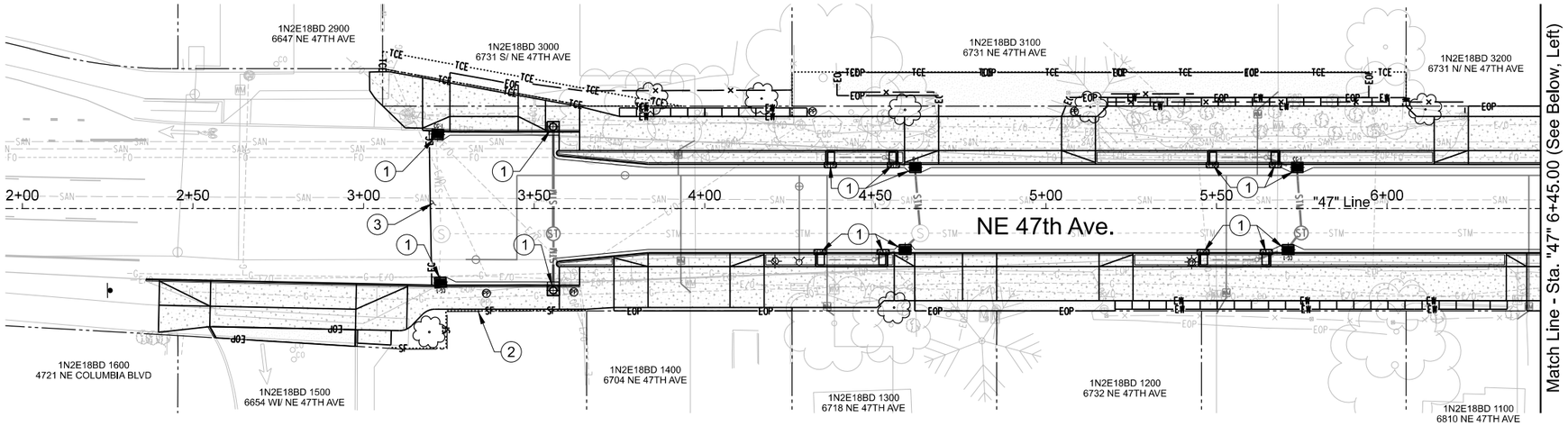

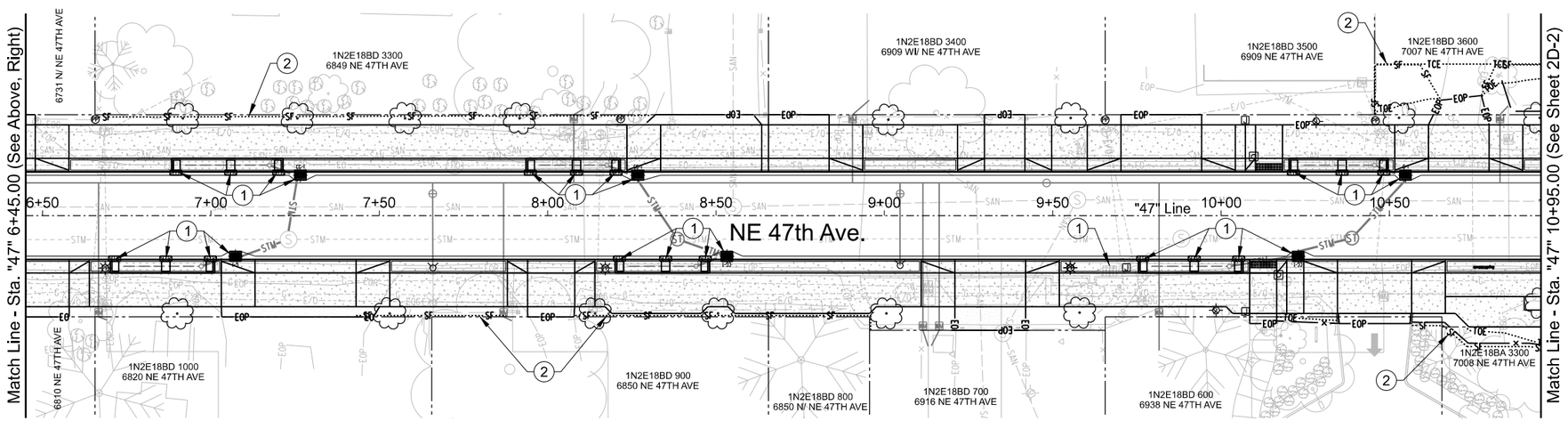

Construction Notes

1. Install inlet protection - 35. See Std. Drg. No. RD1010.
2. Install unsupported sediment fence prior to beginning earthwork. See Std. Drg. No. RD1040.
3. Install Type 1 construction entrance. See Std. Drg. No. RD1000.

0 20 40 60 80
FEET

Plot Date: 5/10/2019 1:13:07 PM Filename: S:_II_Design\T00539 - NE 47th Ave LID - Columbia Blvd - Cornfoot Rd\CAD\PLAN_SHEETS\SHT 02D-01EROSION CONTROL PLAN\PLOT_SHT_02D-01.dgn

NO.	DATE	DESCRIPTION	APPD.
		REVISION	

DESIGNED BY N. Blanchard
CAD BY C. Shearer
CHECKED BY K. Roske
DATE APPROVED May 2019
DIV. ENGINEER S. Townsen

REGISTERED PROFESSIONAL ENGINEER 63222PE OREGON JULY 9, 2001 NICOLE OTT BLANCHARD
Digital Signature
Expires 12/31/2019

APPROVALS:
REG. PROF. ENGR. NO. 84470PE
REG. PROF. ENGR. NO. 51538PE

PBOT
PORTLAND BUREAU OF TRANSPORTATION
DAN SALTZMAN COMMISSIONER
STEVE TOWNSEN, P.E. CITY ENGINEER

CITY OF PORTLAND, OREGON 1851

N.E. 47th Ave: N.E. Columbia Blvd. - N.E. Cornfoot Rd.

Erosion Control Plan

T/4 SECTION 2841,2842 2941,2942
PROJECT NO. PBOT T00539 BES E10853
SHEET NO. 2D-1

PRELIMINARY REVIEW
9/29/2022

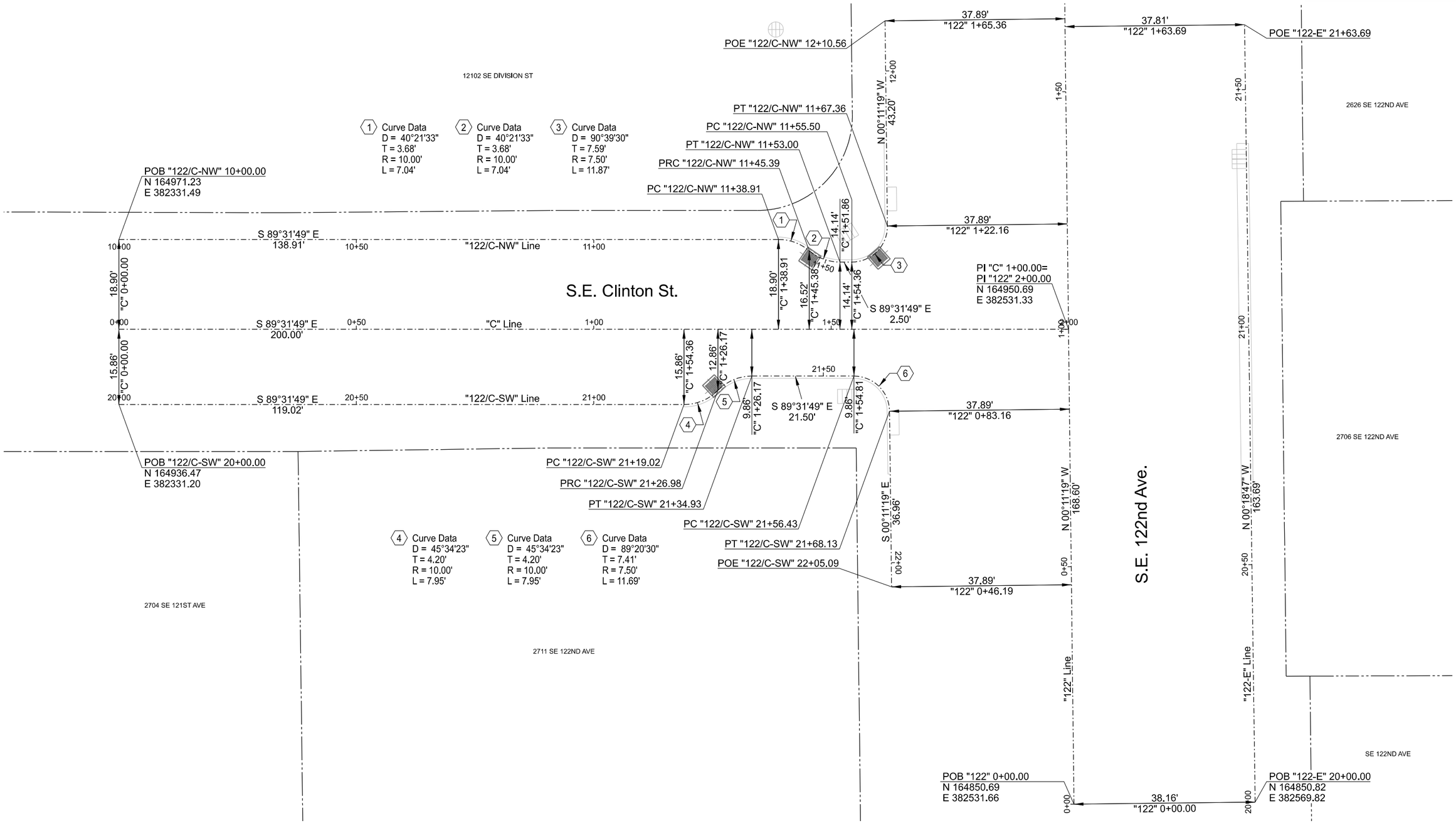

NO.	DATE	DESCRIPTION	APPD.

REVISION

DESIGNED BY X. Designer	DATE APPROVED Sept. 2022
CAD BY X. Drafter	PBOT REVIEWER X. Reviewer
CHECKED BY X. Engineer	PBOT SUPV. X. Eng-Supv

REGISTERED PROFESSIONAL ENGINEER 88888PE OREGON SEPTEMBER 14, 2010 SOMEBODY S. NAME
Expires .....

APPROVALS:

ENGINEERING MANAGER, PE

STEVE TOWNSEN, CITY ENGINEER, 51538PE

PBOT
PORTLAND BUREAU OF TRANSPORTATION
JO ANN HARDESTY COMMISSIONER
STEVE TOWNSEN, P.E. CITY ENGINEER

CITY OF PORTLAND, OREGON 1851

122nd Ave Safety Improve, Ph I

Horizontal Alignment Plan

1/4 SECTION *3343*
PROJECT NO. *T00646*
SHEET NO. *2E*

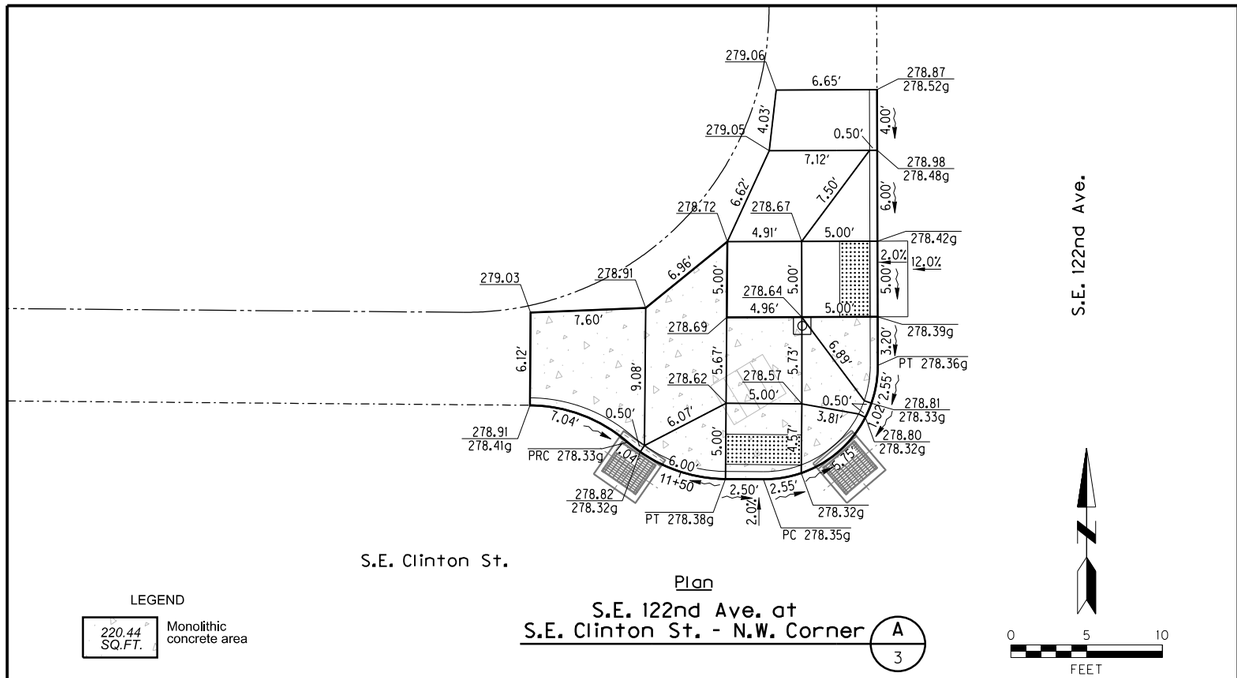

LEGEND

220.44 SQ.FT. — Monolithic concrete area

Plan

S.E. 122nd Ave. at
S.E. Clinton St. - N.W. Corner (A / 3)

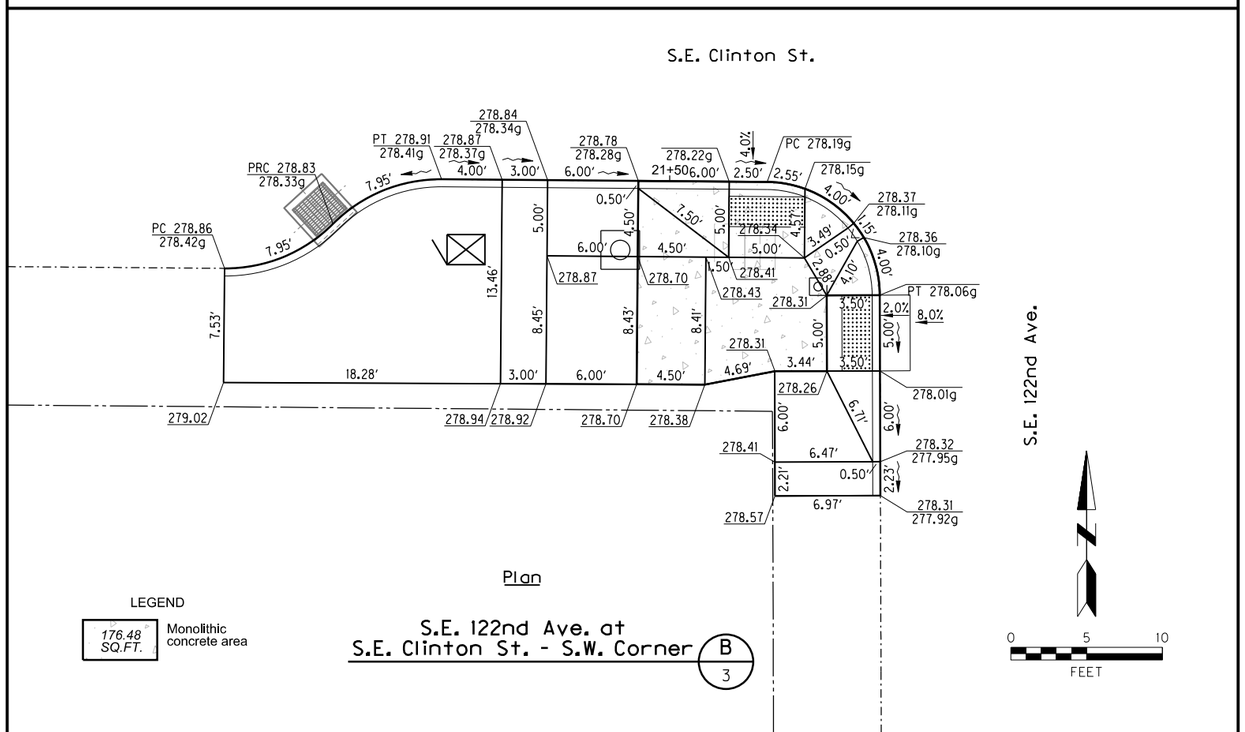

LEGEND

176.48 SQ.FT. — Monolithic concrete area

Plan

S.E. 122nd Ave. at
S.E. Clinton St. - S.W. Corner (B / 3)

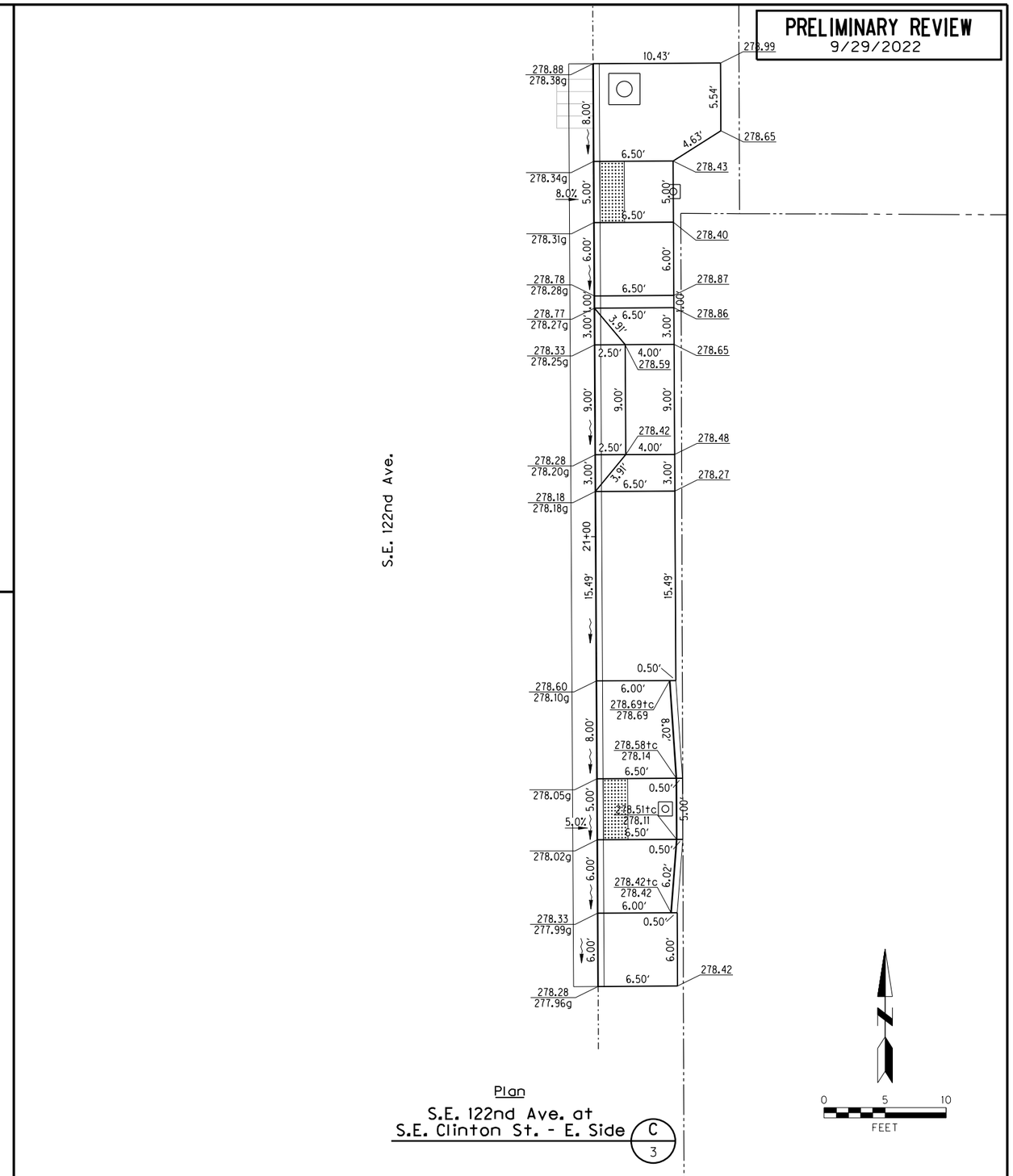

Plan

S.E. 122nd Ave. at
S.E. Clinton St. - E. Side (C / 3)

NO.	DATE	DESCRIPTION	APPD.

REVISION

DESIGNED BY X. Designer	DATE APPROVED Sept. 2022
CAD BY X. Drafter	PBOT REVIEWER X. Reviewer
CHECKED BY X. Engineer	PBOT SUPV. X. Eng-Supv

REGISTERED PROFESSIONAL ENGINEER 88888PE — OREGON — SEPTEMBER 14, 2010 — TOMEBODY S. NAME

Expires .....

APPROVALS:

ENGINEERING MANAGER, PE

STEVE TOWNSEN, CITY ENGINEER, 51538PE

PBOT
PORTLAND BUREAU OF TRANSPORTATION
JO ANN HARDESTY — COMMISSIONER
STEVE TOWNSEN, P.E. — CITY ENGINEER

CITY OF PORTLAND, OREGON 1851

122nd Ave Safety Improve, Ph I

Elevation Detail Plan

1/4 SECTION 3343

PROJECT NO. T00646

SHEET NO. 2F

DocuSign Envelope ID: 4DFD203A-1E97-4E5F-A086-655426F65308

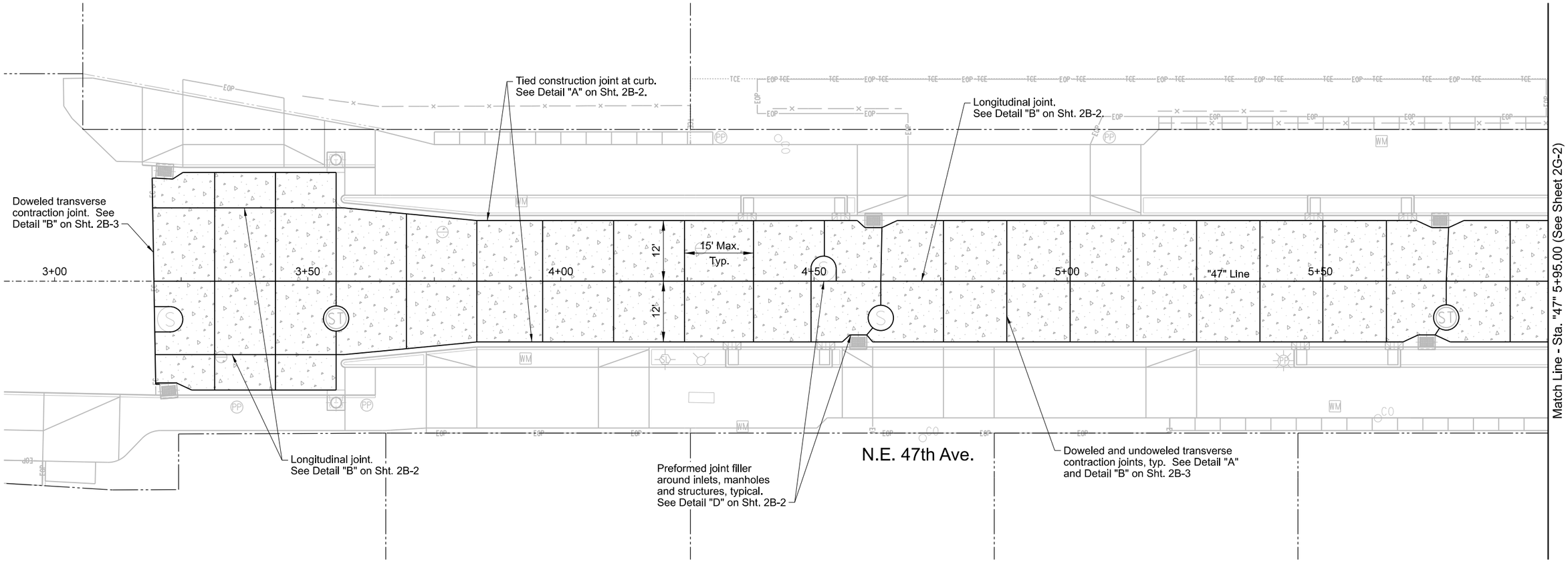

Note:
For details not shown,
see Shts. 2B-2 and 2B-3.

0 10 20 30 40
FEET

NO.	DATE	DESCRIPTION	APPD.
		REVISION	

DESIGNED BY N. Blanchard
DATE APPROVED May 2019
CAD BY C. Shearer
DIV. ENGINEER S. Townsen
CHECKED BY K. Roske

X REGISTERED PROFESSIONAL ENGINEER 63222PE OREGON JULY 9, 2001 NICOLE OTT BLANCHARD
Digital Signature
Expires 12/31/2019

APPROVALS:
REG. PROF. ENGR. NO. 84470PE
REG. PROF. ENGR. NO. 51538PE

PBOT
PORTLAND BUREAU OF TRANSPORTATION
DAN SALTZMAN COMMISSIONER
STEVE TOWNSEN, P.E. CITY ENGINEER

CITY OF PORTLAND, OREGON 1851

N.E. 47th Ave: N.E. Columbia Blvd. - N.E. Cornfoot Rd.

Street Concrete Joint Plan

T/4 SECTION 2841,2842 2941,2942
PROJECT NO. PBOT T00539 BES E10853
SHEET NO. 2G-1

Plot Date: 5/10/2019 11:3:22 PM Filename: S:_II_Design\T00539 - NE 47th Ave LID - Columbia Blvd - Cornfoot Rd\CAD\PLAN_SHEETS\SHT 02G-01CONCRETE SCORING PLAN\PLOT_SHT_02G-01.dgn

PRELIMINARY REVIEW
11/15/2022

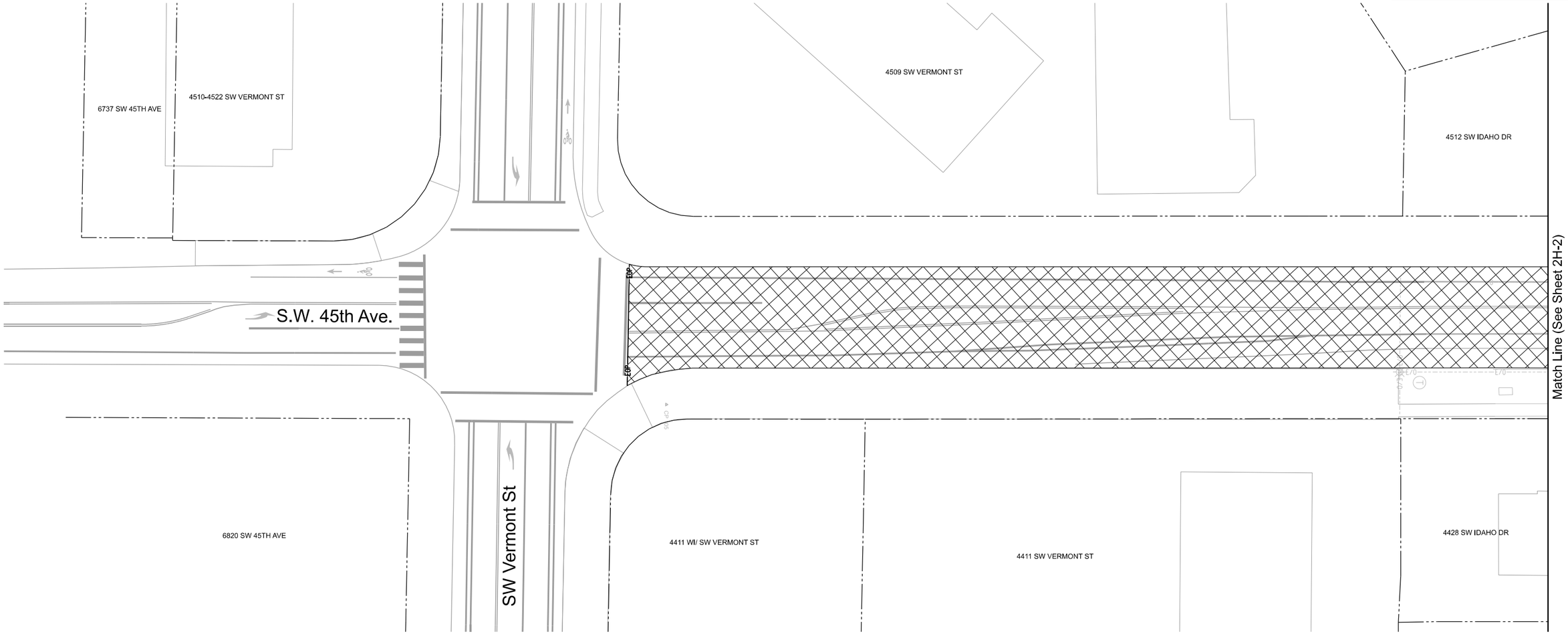

Legend

Grinding Limits

0 20 40 60 80
FEET

Plot Date: 11/15/2022 10:10:04 AM Filename: S:_Ll_Design\T01000 - SW 45th Vermont to Flower\CAD\PLAN_SHEETS\SHT 02H-01PAVING PLAN\PLOT_SHT_02H-01.dgn

NO.	DATE	DESCRIPTION	APPD.

REVISION

DESIGNED BY T. Knighton	DATE APPROVED Nov. 2022
CAD BY C. Shearer	PBOT REVIEWER X. Reviewer
CHECKED BY X. Engineer	PBOT SUPV. X. Eng-Supv

REGISTERED PROFESSIONAL ENGINEER 83729PE OREGON MAY 22, 2015 TIMOTHY K. KNIGHTON
Expires 6/30/23

APPROVALS:

EVA HUNTSINGER, ENGINEERING MANAGER, 84470PE

STEVE TOWNSEN, CITY ENGINEER, 51538PE

PBOT
PORTLAND BUREAU OF TRANSPORTATION
JO ANN HARDESTY COMMISSIONER
STEVE TOWNSEN, P.E. CITY ENGINEER

CITY OF PORTLAND OREGON 1851

Paving Plan

1/4 SECTION 3624,3625
PROJECT NO.
SHEET NO. 2H-1

PRELIMINARY REVIEW
11/15/2022

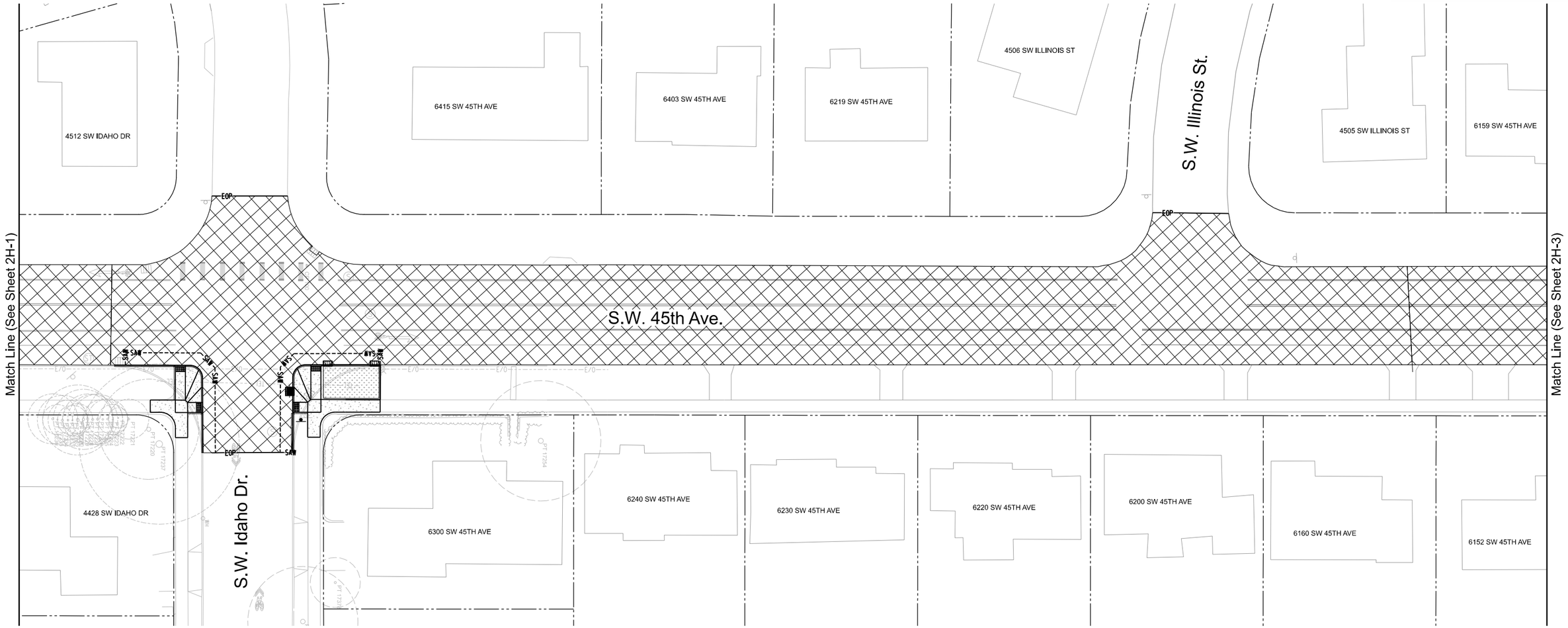

Legend

Grinding Limits

0 20 40 60 80
FEET

NO.	DATE	DESCRIPTION	APPD.
		REVISION	

DESIGNED BY T. Knighton
CAD BY C. Shearer
CHECKED BY X. Engineer
DATE APPROVED Nov. 2022
PBOT REVIEWER X. Reviewer
PBOT SUPV. X. Eng-Supv

REGISTERED PROFESSIONAL ENGINEER 83729PE OREGON MAY 22, 2015 TIMOTHY K. KNIGHTON
Expires 6/30/23

APPROVALS:

EVA HUNTSINGER, ENGINEERING MANAGER, 84470PE

STEVE TOWNSEN, CITY ENGINEER, 51538PE

PBOT
PORTLAND BUREAU OF TRANSPORTATION
JO ANN HARDESTY COMMISSIONER
STEVE TOWNSEN, P.E. CITY ENGINEER

CITY OF PORTLAND, OREGON 1851

Paving Plan

1/4 SECTION 3624,3625
PROJECT NO.
SHEET NO. 2H-2

Plot Date: 11/15/2022 10:10:05 AM Filename: S:_II_Design\T01000 - SW 45th Vermont to Flower\CAD\PLAN SHEETS\SHT 02H-02 PAVING PLAN\PLOT_SHT_02H-02.dgn

PRELIMINARY REVIEW
11/15/2022

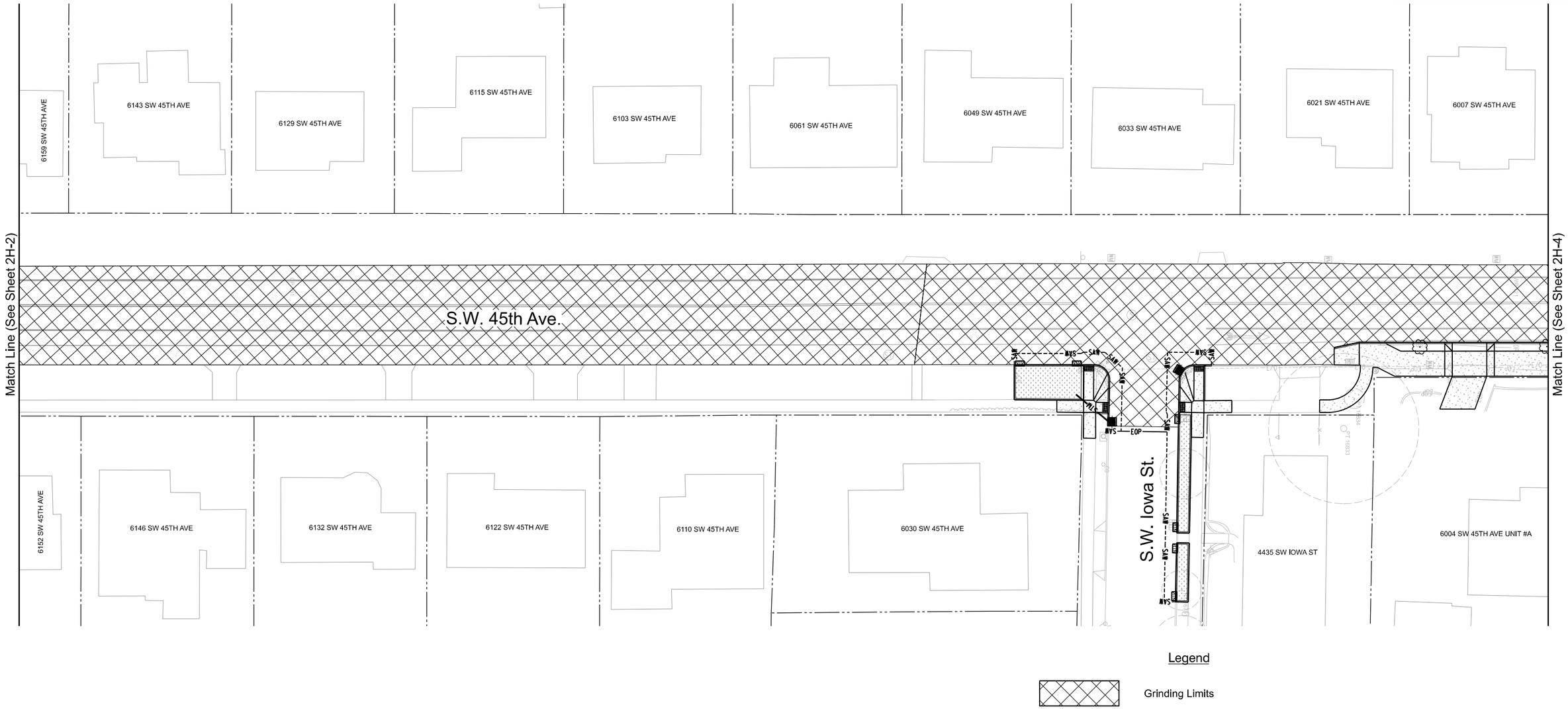

Legend

Grinding Limits

0 20 40 60 80
FEET

Plot Date: 11/15/2022 10:10:07 AM Filename: S:_II_Design\T01000 - SW 45th Vermont to Flower\CAD\PLAN_SHEETS\SHT 02H-03 PAVING PLAN\PLOT_SHT_02H-03.dgn

NO.	DATE	DESCRIPTION	APPD.

REVISION

DESIGNED BY T. Knighton	DATE APPROVED Nov. 2022
CAD BY C. Shearer	PBOT REVIEWER X. Reviewer
CHECKED BY X. Engineer	PBOT SUPV. X. Eng-Supv

REGISTERED PROFESSIONAL ENGINEER 83729PE OREGON MAY 22, 2015 TIMOTHY K. KNIGHTON
Expires 6/30/23

APPROVALS:

EVA HUNTSINGER, ENGINEERING MANAGER, 84470PE

STEVE TOWNSEN, CITY ENGINEER, 51538PE

PBOT
PORTLAND BUREAU OF TRANSPORTATION
JO ANN HARDESTY COMMISSIONER
STEVE TOWNSEN, P.E. CITY ENGINEER

CITY OF PORTLAND OREGON 1851

Paving Plan

1/4 SECTION	3624,3625
PROJECT NO.	
SHEET NO.	2H-3

PRELIMINARY REVIEW
11/15/2022

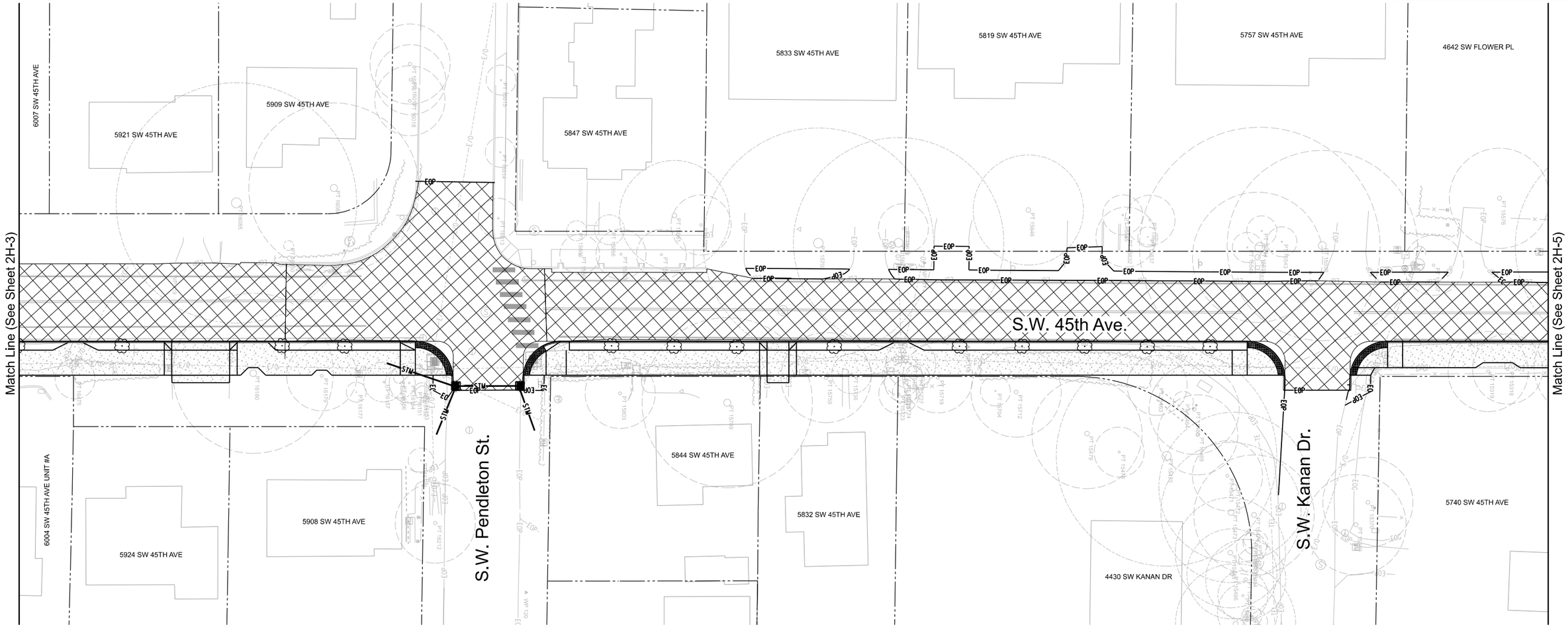

Legend

Grinding Limits

0 20 40 60 80
FEET

Plot Date: 11/15/2022 10:10:08 AM Filename: S:_II_Design\T01000 - SW 45th Vermont to Flower\CAD\PLAN_SHEETS\SHT_02H-04_PAVING_PLAN\PLOT_SHT_02H-04.dgn

NO.	DATE	DESCRIPTION	APPD.
		REVISION	

DESIGNED BY T. Knighton	DATE APPROVED Nov. 2022
CAD BY C. Shearer	PBOT REVIEWER X. Reviewer
CHECKED BY X. Engineer	PBOT SUPV. X. Eng-Supv

REGISTERED PROFESSIONAL ENGINEER 83729PE OREGON MAY 22, 2015 TIMOTHY K. KNIGHTON
Expires 6/30/23

APPROVALS:

EVA HUNTSINGER, ENGINEERING MANAGER, 84470PE

STEVE TOWNSEN, CITY ENGINEER, 51538PE

PBOT
PORTLAND BUREAU OF TRANSPORTATION
JO ANN HARDESTY COMMISSIONER
STEVE TOWNSEN, P.E. CITY ENGINEER

CITY OF PORTLAND, OREGON 1851

Paving Plan

1/4 SECTION 3624,3625
PROJECT NO.
SHEET NO. 2H-4

PRELIMINARY REVIEW
11/15/2022

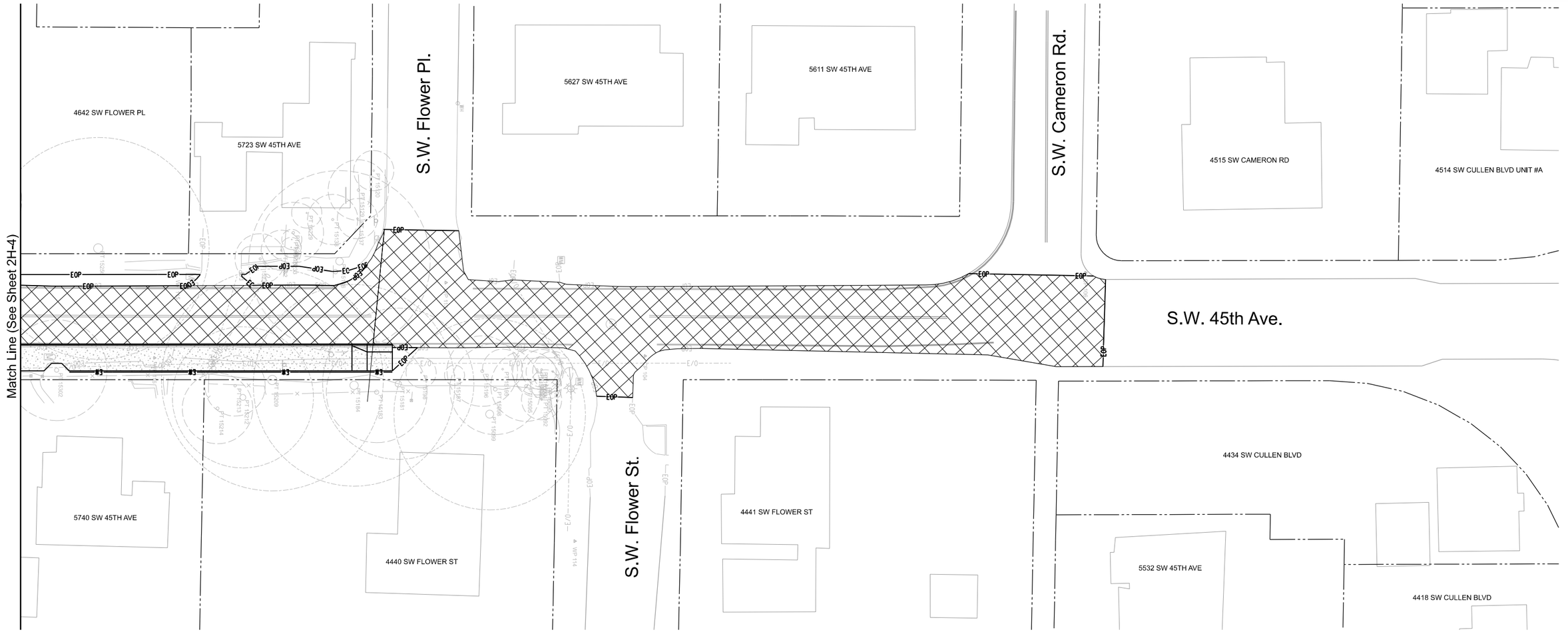

Legend

Grinding Limits

0 20 40 60 80
FEET

Plot Date: 11/15/2022 10:10:10 AM Filename: S:_IL_Design\T01000 - SW 45th Vermont to Flower\CAD\PLAN_SHEETS\SHT 02H-05 PAVING PLAN\PLOT_SHT_02H-05.dgn

NO.	DATE	DESCRIPTION	APPD.

REVISION

DESIGNED BY T. Knighton	DATE APPROVED Nov. 2022
CAD BY C. Shearer	PBOT REVIEWER X. Reviewer
CHECKED BY X. Engineer	PBOT SUPV. X. Eng-Supv

REGISTERED PROFESSIONAL ENGINEER 83729PE OREGON MAY 22, 2015 TIMOTHY K. KNIGHTON
Expires 6/30/23

APPROVALS:

EVA HUNTSINGER, ENGINEERING MANAGER, 84470PE

STEVE TOWNSEN, CITY ENGINEER, 51538PE

PBOT
PORTLAND BUREAU OF TRANSPORTATION
JO ANN HARDESTY COMMISSIONER
STEVE TOWNSEN, P.E. CITY ENGINEER

CITY OF PORTLAND OREGON 1851

Paving Plan

T/4 SECTION 3624,3625
PROJECT NO.
SHEET NO. 2H-5

PRELIMINARY REVIEW
9/29/2022

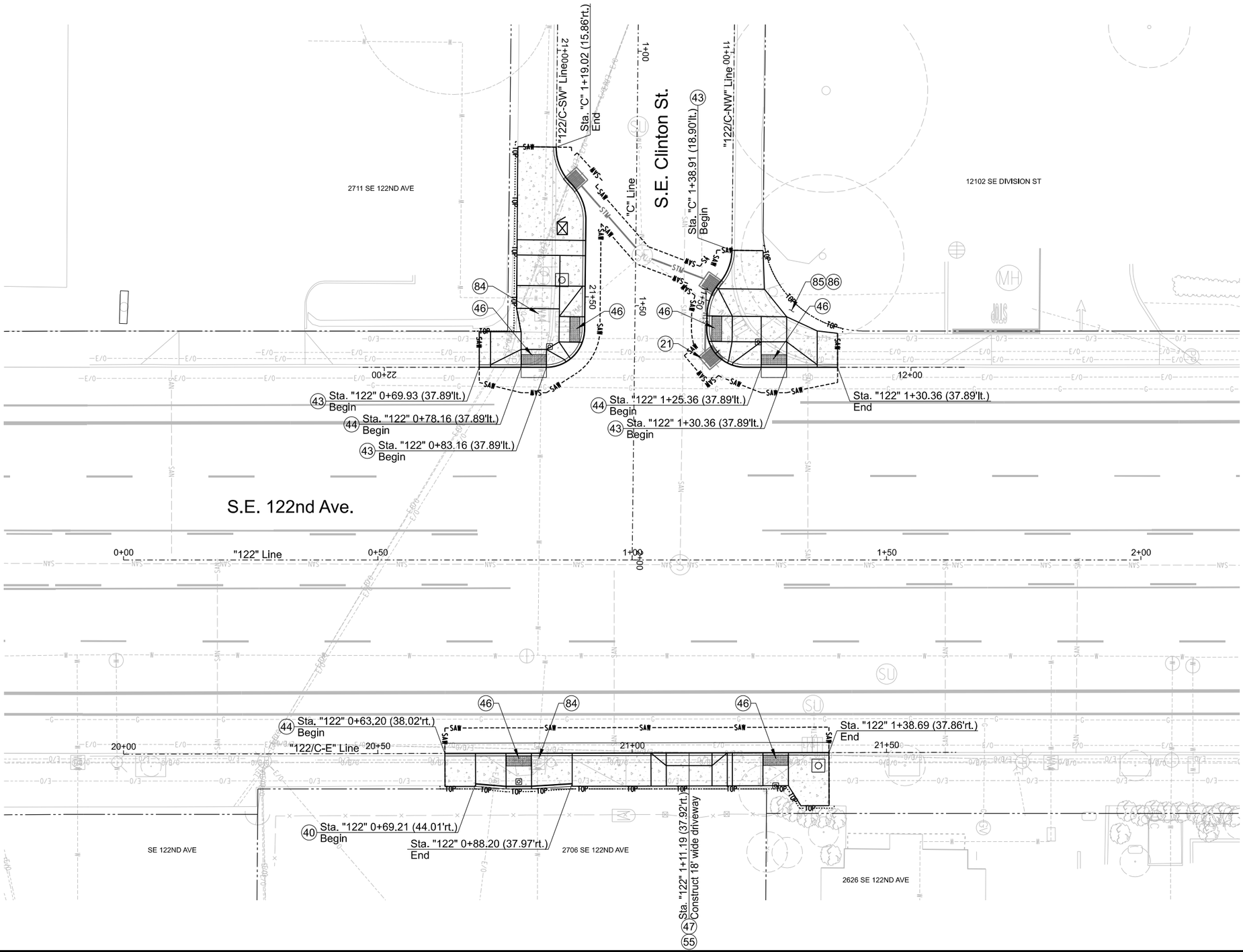

Construction Notes

21 Relocate gas facility (by others).

40 Construct standard curb. See Std. Drg. No. P-540.

43 Construct monolithic curb and sidewalk. See Detail "A" on Sht. 2B and Std. Drg. No. P-551.

44 Construct monolithic curb and sidewalk with 24 inch gutter. See Detail "A" on Sht. 2B and Std. Drg. Nos. P-544 and P-551.

46 Construct monolithic sidewalk ramp. See 2F Sheets and Std. Drg. Nos. P-547, P-548 and P-550.

47 Construct concrete driveway. See 2F Sheets and Std. Drg. No. P-528.

55 Construct 17 in. AC pavement repair. See Detail "A" on Sheet 2B and Std. Drg. No. P-518.

84 Adjust box - 3.

85 Install topsoil - 6 in. thick.

86 Install lawn seeding.

0 10 20 30 40
FEET

NO.	DATE	DESCRIPTION	APPD.
		REVISION	

DESIGNED BY	X. Designer
CAD BY	X. Drafter
CHECKED BY	X. Engineer
DATE APPROVED	Sept. 2022
PBOT REVIEWER	X. Reviewer
PBOT SUPV.	X. Eng-Supv

REGISTERED PROFESSIONAL ENGINEER 88888PE OREGON SEPTEMBER 14, 2010 SOMEBODY S. NAME
Expires .....

APPROVALS:

ENGINEERING MANAGER, PE

STEVE TOWNSEN, CITY ENGINEER, 51538PE

PBOT
PORTLAND BUREAU OF TRANSPORTATION
JO ANN HARDESTY COMMISSIONER
STEVE TOWNSEN, P.E. CITY ENGINEER

CITY OF PORTLAND, OREGON 1851

122nd Ave Safety Improve, Ph I

Street Plan

1/4 SECTION 3343
PROJECT NO. T00646
SHEET NO. 3

Plot Date: 9/29/2022 11:04:05 AM Filename: \\pdotnt\grp$cds_IL_Design\T00646 - 122nd Ave Safety Improve Ph I\CAD\PLAN_SHEETS\SHT 03 STREET PLAN\PLOT_SHT_03.dgn

PRELIMINARY REVIEW
9/29/2022

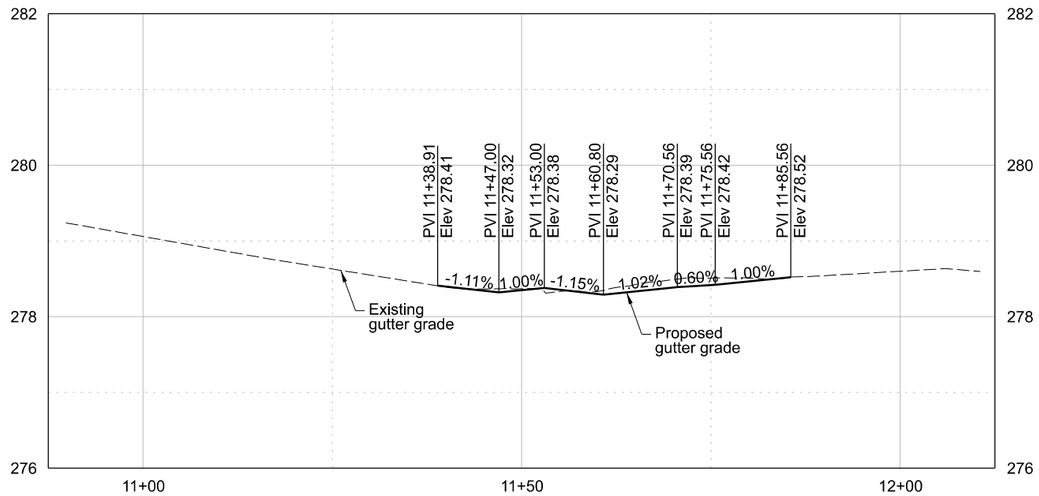

"122/C-NW" Line

Profile

Scale: 1" = 1' Vert.
1" = 10' Horiz.

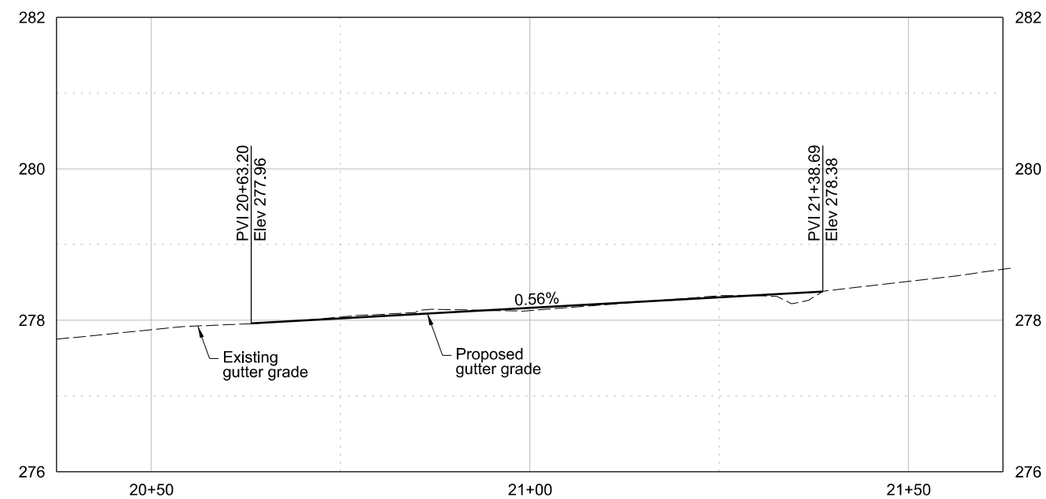

"122/C-E" Line

Profile

Scale: 1" = 1' Vert.
1" = 10' Horiz.

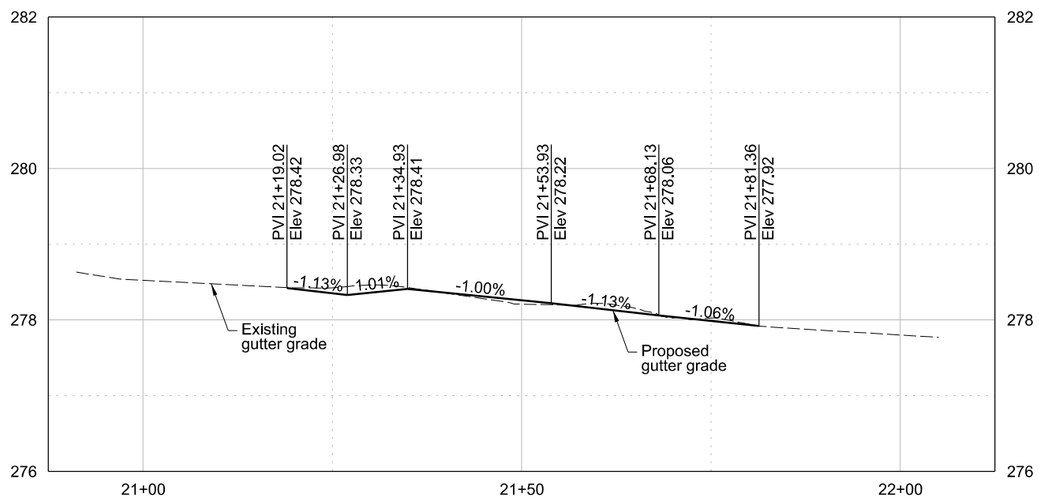

"122/C-SW" Line

Profile

Scale: 1" = 1' Vert.
1" = 10' Horiz.

NO.	DATE	DESCRIPTION	APPD.

REVISION

DESIGNED BY X. Designer	DATE APPROVED Sept. 2022
CAD BY X. Drafter	PBOT REVIEWER X. Reviewer
CHECKED BY X. Engineer	PBOT SUPV. X. Eng-Supv

REGISTERED PROFESSIONAL ENGINEER 88888PE OREGON SEPTEMBER 14, 2010 SOMEBODY S. NAME
Expires .....

APPROVALS:

ENGINEERING MANAGER, PE

STEVE TOWNSEN, CITY ENGINEER, 51538PE

PBOT
PORTLAND BUREAU OF TRANSPORTATION
JO ANN HARDESTY — COMMISSIONER
STEVE TOWNSEN, P.E. — CITY ENGINEER

CITY OF PORTLAND OREGON 1851

122nd Ave Safety Improve, Ph I

Street Profiles

1/4 SECTION 3343
PROJECT NO. T00646
SHEET NO. 3A

Drainage Plan Example - When No Profiles Are Needed

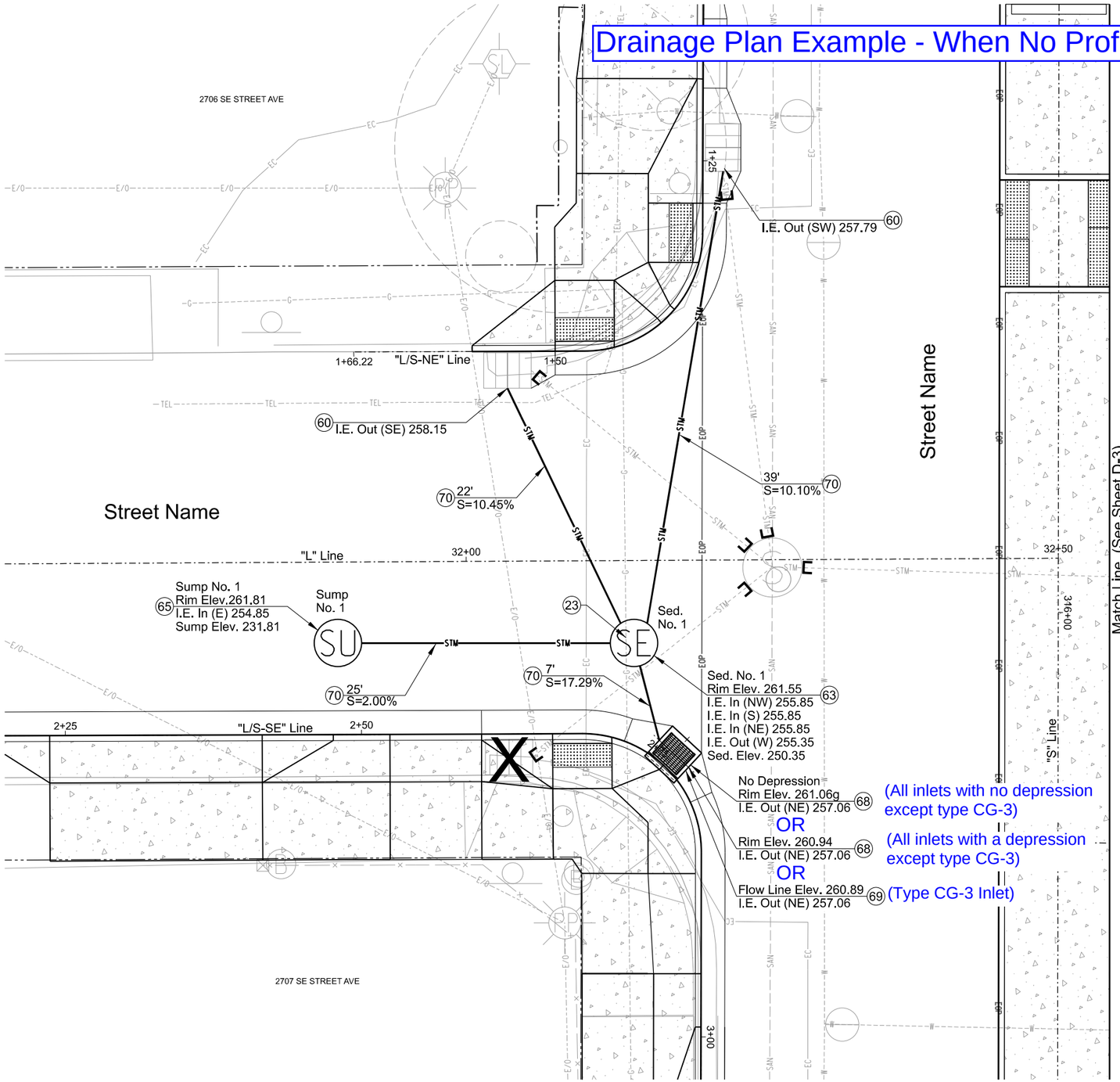

Construction Notes

23 Pothole existing utility to verify depth - 1.

60 Connect to existing structure.
See Std. Drg. RD339.

63 Construct concrete maintenance hole, sed. - 1.
See Std. Drg. P-161.

65 Construct 48" sump maintenance hole, 30' deep - 1.
See Std. Drg. P-160.

68 Construct type "G-2" inlet w/o sump - 1.
See Std. Drg. RD363, RD364 & RD365.

69 Construct type "CG-3" inlet w/o sump - 1.
See Std. Drg. RD371 & RD372.

70 Install 12" PVC storm sew. pipe - 93 ft.
ASTM D3034 SDR35 class "D"bedding.

Notes:
Drainage profiles are only required when there are water lines crossing proposed storm lines or when there are potential utility conflicts.

Display vertical information in the format shown on this sheet.

Don't call out inlet gutter elevations on the 2F sheets, they should only be shown on the D sheets.

Don't display stationing on pipes.

0 5 10 15 20
FEET

NO.	DATE	DESCRIPTION	APPD.

REVISION

PBOT
PORTLAND BUREAU OF TRANSPORTATION

STEVE TOWNSEN, CITY ENGINEER, 51538PE — DATE

DESIGNED BY	DATE APPROVED
X. Designer	Month 20XX
CAD BY	ENGR. SUPV.
X. CadDrafter	X. Supervisor
CHECKED BY	ENGR.DIV.MGR.
X. Checker	X. DivMgr
BES REVIEWER	CONSTR.DIV.MGR.
B. ESreviewer	X. CstDivMgr

APPROVAL:

PAUL SUTO, CHIEF ENGINEER, 82245PE

CITY OF PORTLAND, OREGON
BUREAU OF ENVIRONMENTAL SERVICES
MINGUS MAPPS — COMMISSIONER
PAUL SUTO, P.E. — CHIEF ENGINEER

CITY OF PORTLAND, OREGON 1851

Project Name
Stormwater Plan

1/4 SECTION XXXX
PROJECT NO. TOXXXX BES EXXXXX
SHEET NO. D-2

Plot Date: 8/9/2023 2:29:12 PM Filename: \\pdotnt\Grp$CDS_V_CDCM Standards\3) Templates, Forms_II_Design\CAD\PLAN_SHEETS\SHT D-02 STORMWATER PLAN\Save\D Sheet Examples (2023)\Sheet D-2 Example (No Profiles).dgn

Drainage Plan and Profile Sheets Example

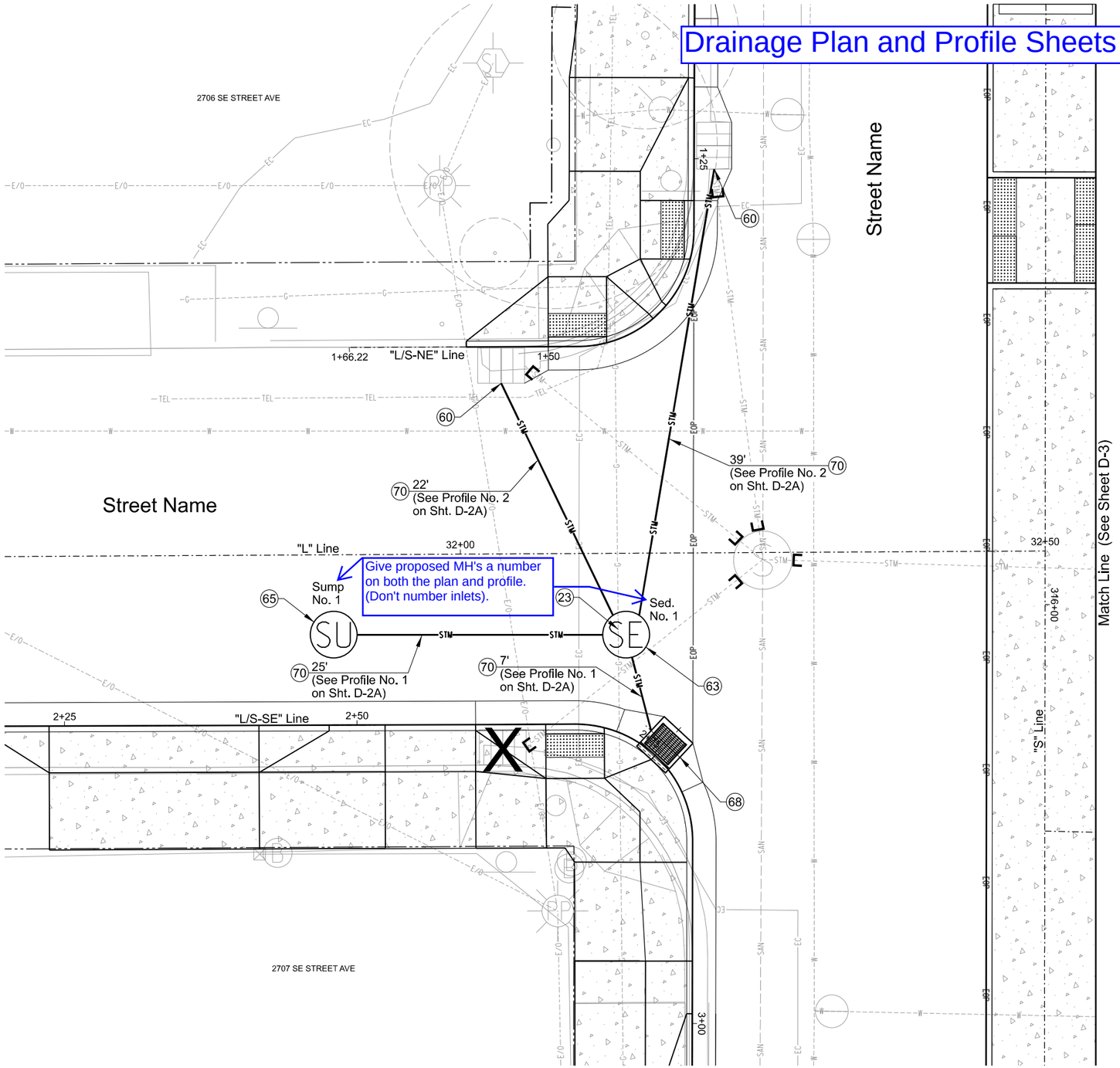

Construction Notes

23 Pothole existing utility to verify depth - 1.

60 Connect to existing structure.
See Std. Drg. RD339.

63 Construct concrete maintenance hole, sed. - 1.
See Std. Drg. P-161.

65 Construct 48" sump maintenance hole, 30' deep - 1.
See Std. Drg. P-160.

68 Construct type "G-2" inlet w/o sump - 1.
See Std. Drgs. RD363, RD364 & RD365.

70 Install 12" PVC storm sew. pipe - 93 ft.

Notes:
Drainage profiles are only required when there are water lines crossing proposed storm lines or when there are potential utility conflicts.

Put profiles on the same page as the plan, above the plan view, if they will fit. Otherwise put the profiles on a D-XA sheet.

Don't call out inlet gutter elevations on the 2F sheets, they should only be shown on the D sheets.

Don't display stationing on pipes.

0 5 10 15 20
FEET

NO.	DATE	DESCRIPTION	APPD.

REVISION

PBOT
PORTLAND BUREAU OF TRANSPORTATION

STEVE TOWNSEN, CITY ENGINEER, 51538PE DATE

DESIGNED BY	DATE APPROVED
X. Designer	Month 20XX
CAD BY	ENGR. SUPV.
X. CadDrafter	X. Supervisor
CHECKED BY	ENGR.DIV.MGR.
X. Checker	X. DivMgr
BES REVIEWER	CONSTR.DIV.MGR.
B. ESreviewer	X. CstDivMgr

APPROVAL:

PAUL SUTO, CHIEF ENGINEER, 82245PE

CITY OF PORTLAND, OREGON
BUREAU OF
ENVIRONMENTAL SERVICES
MINGUS MAPPS COMMISSIONER
PAUL SUTO, P.E. CHIEF ENGINEER

CITY OF PORTLAND, OREGON 1851

Project Name

Stormwater Plan

1/4 SECTION
XXXX
PROJECT NO.
TOXXXX
BES EXXXXX
SHEET NO.
D-2

Plot Date: 8/9/2023 2:35:27 PM Filename: \\pdotnt\Grp$CDS_V_CDCM Standards\3) Templates, Forms_IL_Design\CAD\PLAN_SHEETS\SHT D-02 STORMWATER PLAN\Save\D Sheet Examples (2023)\Sheet D-2 Example.dgn

Give proposed MH's a number on both the plan and profile. (Don't number inlets).

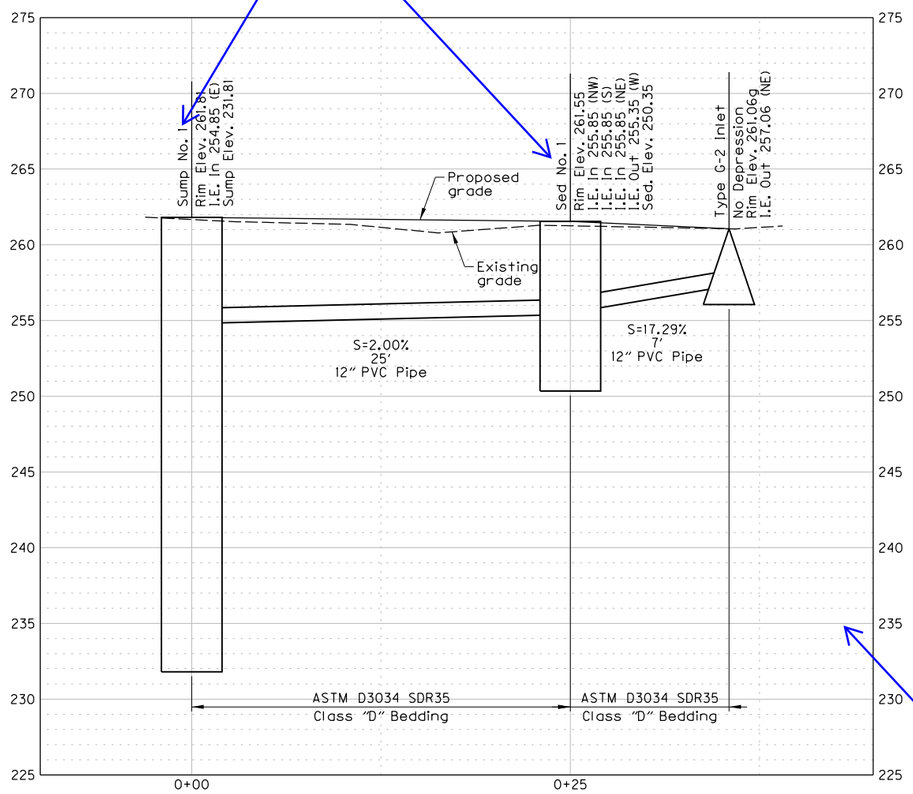

SE XXXX St. at SE XXXX Ave.

Profile No. 1

Scale: 1" = 5' Vert.
1" = 5' Horiz.

Adjust major grid lines and elevations displayed as necessary if vertical is exaggerated

Exaggerate vertical if necessary for clarity

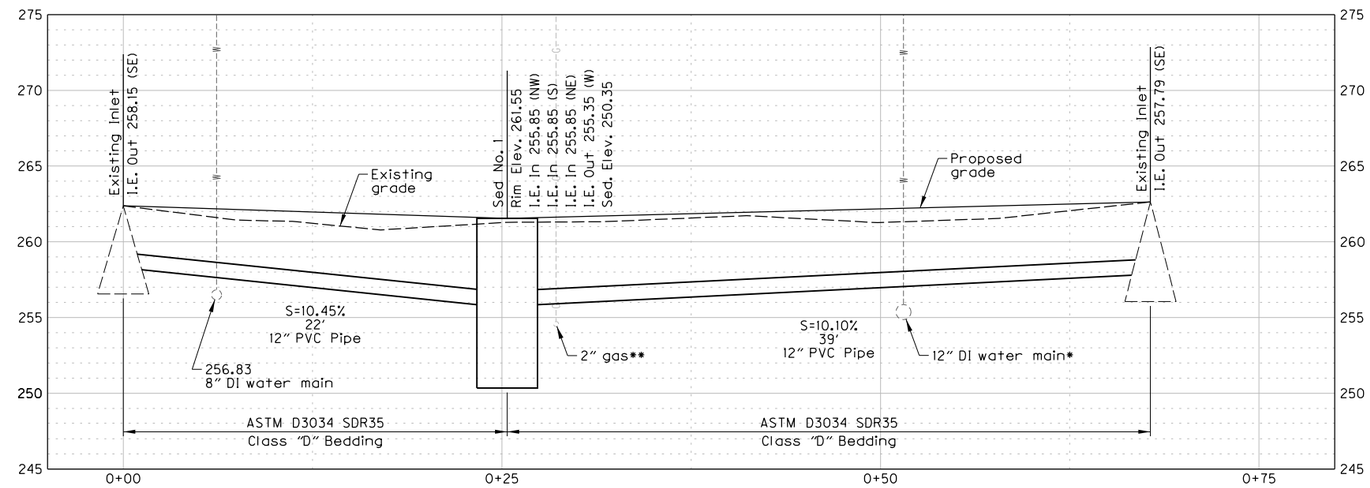

SE XXXX St. at SE XXXX Ave.

Profile No. 2

Scale: 1" = 5' Vert.
1" = 5' Horiz.

*Assumed depth, pothole in construction.
**To be relocated by others.

Notes:
Drainage profiles are only required when there are water lines crossing proposed storm lines or when there are potential utility conflicts.

Put profiles on the same page as the plan, above the plan view, if they will fit. Otherwise put the profiles on a D-XA sheet.

WARNING
0 ½ 1
IF THIS BAR DOES NOT MEASURE 1" THEN DRAWING IS NOT TO SCALE.

NO.	DATE	DESCRIPTION	APPD.

REVISION

PBOT
PORTLAND BUREAU OF TRANSPORTATION

STEVE TOWNSEN, CITY ENGINEER, 51538PE — DATE

DESIGNED BY X. Designer	DATE APPROVED Month 20XX
CAD BY X. CadDrafter	ENGR. SUPV. X. Supervisor
CHECKED BY X. Checker	ENGR.DIV.MGR. X. DivMgr
-	CONSTR.DIV.MGR. X. CstDivMgr

APPROVAL:

PAUL SUTO, CHIEF ENGINEER, 82245PE

CITY OF PORTLAND, OREGON
BUREAU OF ENVIRONMENTAL SERVICES
MINGUS MAPPS — COMMISSIONER
PAUL SUTO, P.E. — CHIEF ENGINEER

Project Name

Stormwater Profiles

T/4 SECTION XXXX
PROJECT NO. T0XXXX BES EXXXXX
SHEET NO. D-2A

Plot Date: 8/9/2023 2:43:27 PM Filename: \\pdotnt\Grp$CDS_V_CDCM Standards\3) Templates, Forms_11_Design\CAD\PLAN SHEETS\SHT D-02 STORMWATER PLAN\Save\D Sheet Examples (2023)\Sheet D-2A Example.dgn

DocuSign Envelope ID: AD0DEB8A-59D1-4DDE-AE61-5C699AC8BFE3

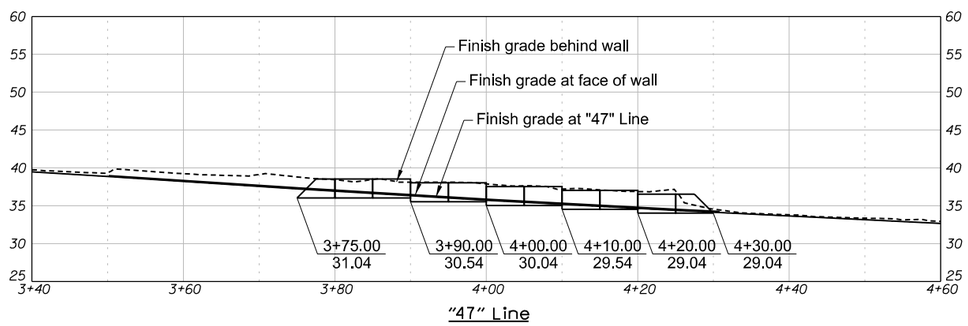

Wall 1 Profile

Scale: 1" = 10'

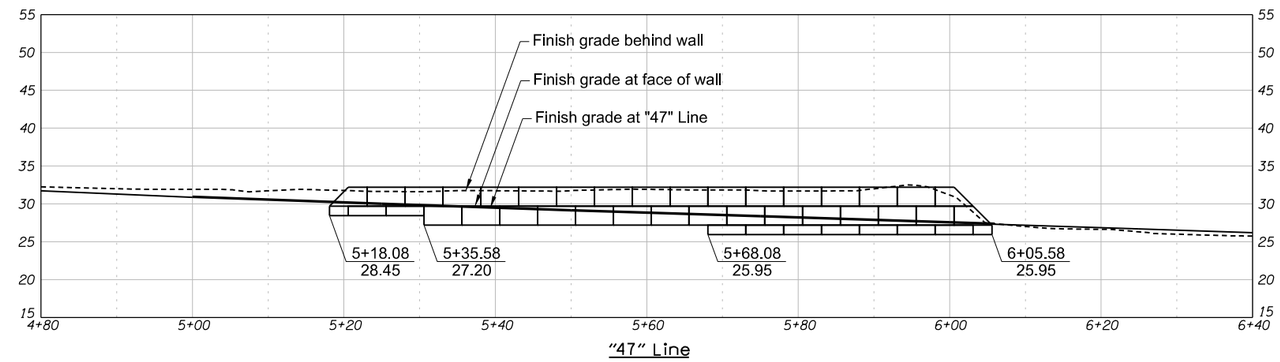

Wall 2 Profile

Scale: 1" = 10'

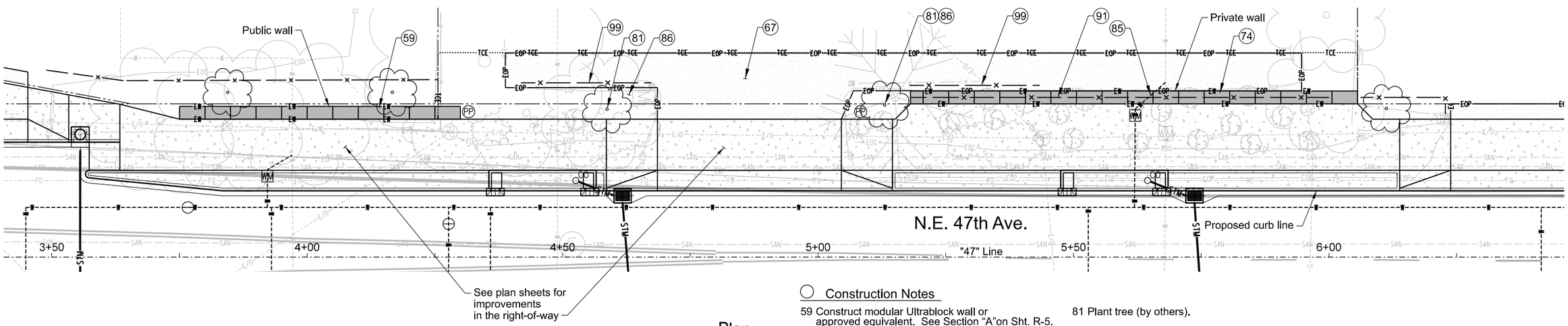

Plan

Construction Notes

59 Construct modular Ultrablock wall or approved equivalent. See Section "A"on Sht. R-5.

67 Construct asphalt driveway connection 6" nom. thickness, ½"dense MHMAC over 6" aggregate base. Match existing asphalt if thicker.

74 Construct modular Ultrablock wall. See Section "B" on Sht. R-5.

81 Plant tree (by others).

85 Sleeve water service under retaining wall.

86 Install bark mulch - 4" thick.

91 Install Type 'C' Protective Fencing. See Std. Drg. Nos. BR240, BR241, and BR242.

0 10 20 30 40
FEET

NO.	DATE	DESCRIPTION	APPD.

REVISION

DESIGNED BY	DATE APPROVED
N. Blanchard	May 2019
CAD BY	DIV. ENGINEER
C. Shearer	S. Townsen
CHECKED BY	
K. Roske	

REGISTERED PROFESSIONAL ENGINEER 63222PE OREGON JULY 9, 2001 NICOLE OTT BLANCHARD
X Digital Signature
Expires 12/31/2019

APPROVALS:
REG. PROF. ENGR. NO. 84470PE
REG. PROF. ENGR. NO. 51538PE

PBOT
PORTLAND BUREAU OF TRANSPORTATION
DAN SALTZMAN COMMISSIONER
STEVE TOWNSEN, P.E. CITY ENGINEER

CITY OF PORTLAND, OREGON 1851

N.E. 47th Ave: N.E. Columbia Blvd. - N.E. Cornfoot Rd.

Retaining Walls 1 & 2 Plan and Profile

1/4 SECTION 2841,2842 2941,2942
PROJECT NO. PBOT T00539 BES E10853
SHEET NO. R-1

Plot Date: 5/16/2019 3:10:14 PM Filename: S:_ll_Design\T00539 - NE 47th Ave LID - Columbia Blvd - Cornfoot Rd\CAD\PLAN_SHEETS\SHT R-01RETAINING WALL PLAN AND PROFILE\PLOT_SHT_R-01.dgn

DocuSign Envelope ID: AD0DEB8A-59D1-4DDE-AE61-5C699AC8BFE3

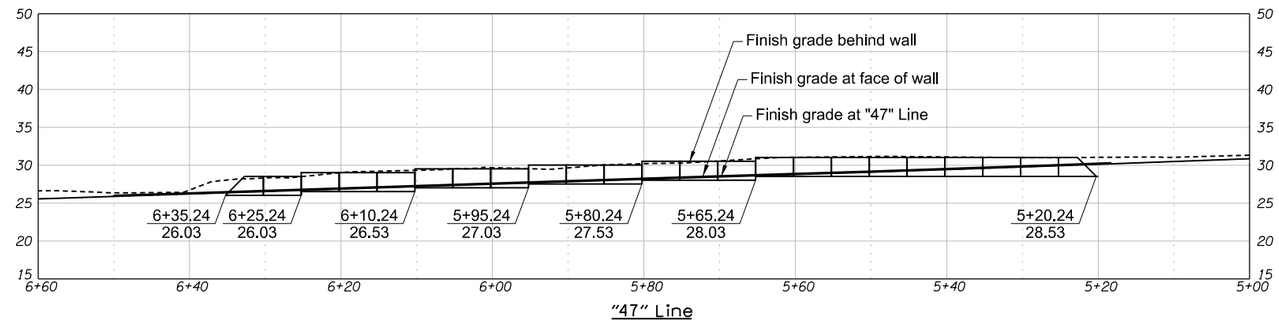

Wall 3 Profile

Scale: 1" = 10'

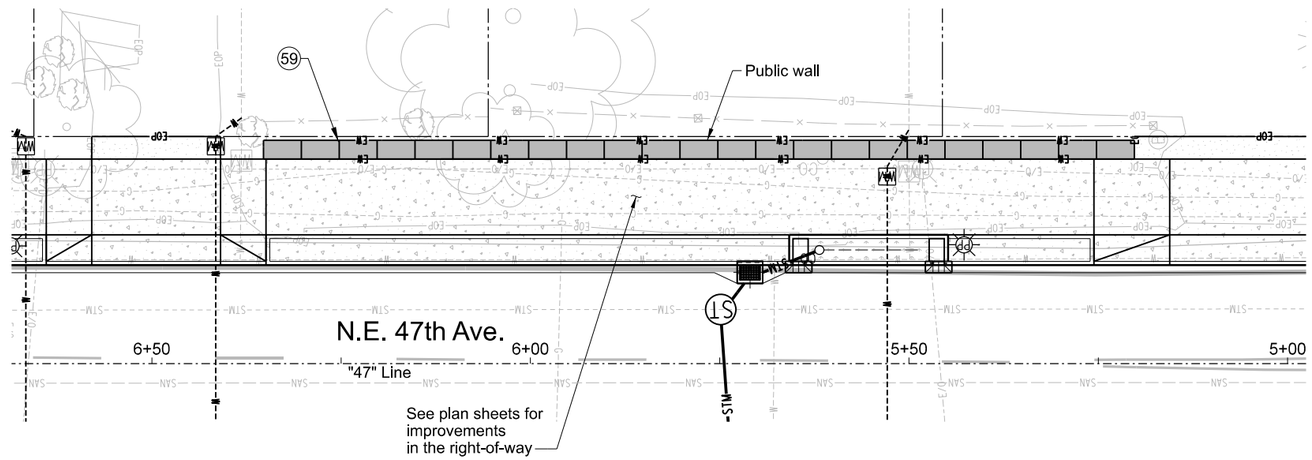

Plan

Construction Notes

59 Construct modular Ultrablock wall or approved equivalent. See Section "A"on Sht. R-5.

0 10 20 30 40
FEET

NO.	DATE	DESCRIPTION	APPD.

REVISION

DESIGNED BY N. Blanchard | DATE APPROVED May 2019
CAD BY C. Shearer | DIV. ENGINEER S. Townsen
CHECKED BY K. Roske

REGISTERED PROFESSIONAL ENGINEER 63222PE OREGON JULY 9, 2001 NICOLE OTT BLANCHARD
X Digital Signature
Expires 12/31/2019

APPROVALS:
REG. PROF. ENGR. NO. 84470PE
REG. PROF. ENGR. NO. 51538PE

PBOT
PORTLAND BUREAU OF TRANSPORTATION
DAN SALTZMAN COMMISSIONER
STEVE TOWNSEN, P.E. CITY ENGINEER

CITY OF PORTLAND OREGON 1851

N.E. 47th Ave: N.E. Columbia Blvd. - N.E. Cornfoot Rd.

Retaining Wall 3 Plan and Profile

1/4 SECTION 2841,2842 2941,2942
PROJECT NO. PBOT T00539 BES E10853
SHEET NO. R-2

Plot Date: 5/16/2019 3:01:16 PM Filename: S:_II_Design\T00539 - NE 47th Ave LID - Columbia Blvd - Cornfoot Rd\CAD\PLAN_SHEETS\SHT R-02 RETAINING WALL PLAN AND PROFILE\PLOT_SHT_R-02.dgn

DocuSign Envelope ID: AD0DEB8A-59D1-4DDE-AE61-5C699AC8BFE3

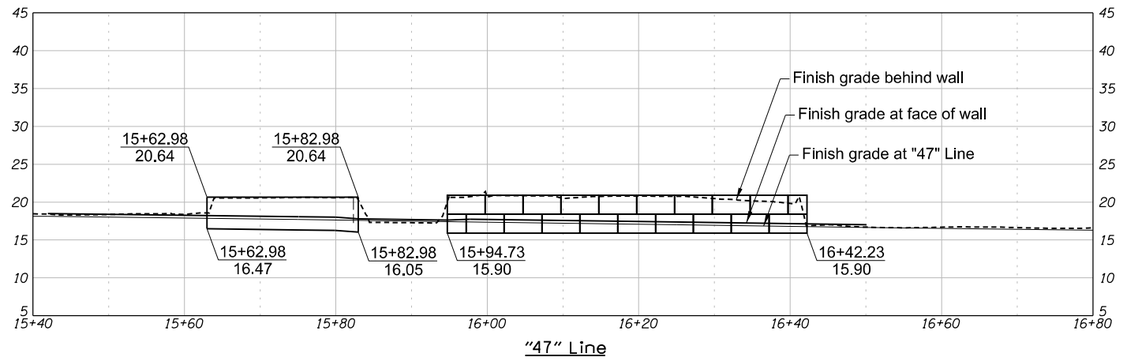

Wall 4 Profile

Scale: 1" = 10'

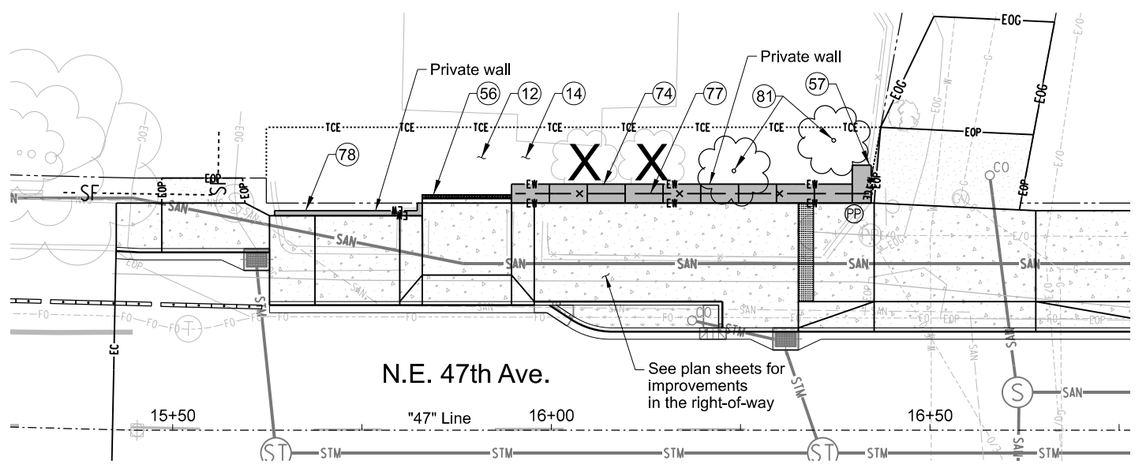

Plan

Construction Notes

12 Protect existing structure.

14 Remove sidewalk. Coordinate with adjacent property owner.

56 Install trench drain. See Sht. D-5.

57 Reconstruct existing wall to match into new wall.

74 Construct modular Ultrablock wall or approved equivalent. See Section "B" on Sht. R-5.

77 Install Type CL-4 chain link fence. See Std. Drg. No. RD815.

78 Construct cantilever retaining wall, cast-in-place concrete. See Section "A" on Sht. R-6.

81 Plant tree (by others).

0 10 20 30 40
FEET

NO.	DATE	DESCRIPTION	APPD.

REVISION

DESIGNED BY N. Blanchard	DATE APPROVED May 2019
CAD BY C. Shearer	DIV. ENGINEER S. Townsen
CHECKED BY K. Roske	

X REGISTERED PROFESSIONAL ENGINEER 63222PE OREGON JULY 9, 2001 NICOLE OTT BLANCHARD
Digital Signature
Expires 12/31/2019

APPROVALS:

REG. PROF. ENGR. NO. 84470PE

REG. PROF. ENGR. NO. 51538PE

PBOT
PORTLAND BUREAU OF TRANSPORTATION
DAN SALTZMAN COMMISSIONER
STEVE TOWNSEN, P.E. CITY ENGINEER

CITY OF PORTLAND, OREGON 1851

N.E. 47th Ave: N.E. Columbia Blvd. - N.E. Cornfoot Rd.

Retaining Wall 4 Plan and Profile

1/4 SECTION 2841,2842 2941,2942

PROJECT NO. PBOT T00539 BES E10853

SHEET NO. R-3

Plot Date: 5/16/2019 3:03:16 PM Filename: S:_ll_Design\T00539 - NE 47th Ave LID - Columbia Blvd - Cornfoot Rd\CAD\PLAN_SHEETS\SHT R-03 RETAINING WALL PLAN AND PROFILE\PLOT_SHT_R-03.dgn

DocuSign Envelope ID: AD0DEB8A-59D1-4DDE-AE61-5C699AC8BFE3

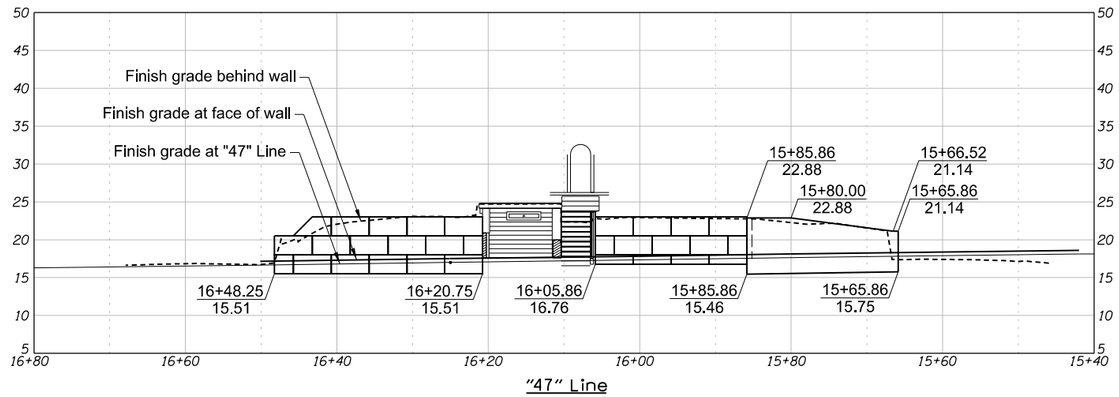

Wall 5 Profile

Scale: 1" = 10'

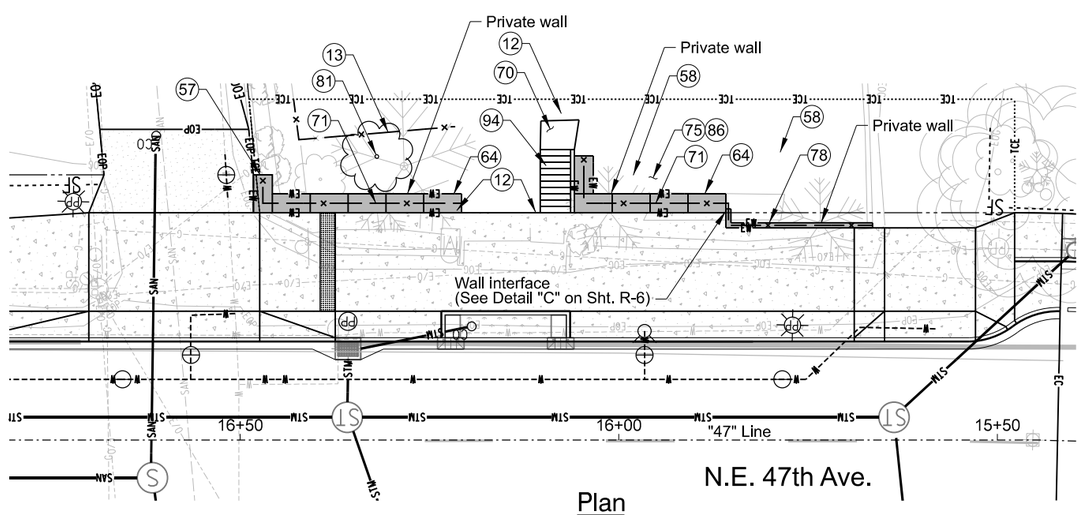

Plan

Construction Notes

12 Protect existing structure.

13 Remove and reconstruct existing cedar fence as necessary. Coordinate with adjacent property owner.

57 Reconstruct existing wall to match into new wall.

58 Connect existing roof drains into approved outlet.

64 Construct modular Ultrablock wall or approved equivalent. See Section "C"on Sht. R-5.

70 Construct sidewalk, 6"thick See Typical Sections and Std. Drg. No. P-551.

71 Install Type CL-4 vinyl clad chain link fence. See Std. Drg. No. RD815.

75 Replace plants/groundcover in kind within grading limits.

78 Construct cantilever retaining wall, cast-in-place concrete. See Section "B" on Sht. R-6.

81 Plant tree (by others).

86 Install bark mulch - 4" thick.

94 Construct stairs with pedestrian handrail. See Std. Drg. Nos. RD120, RD770 and RD771.

0 10 20 30 40
FEET

NO.	DATE	DESCRIPTION	APPD.

REVISION

DESIGNED BY N. Blanchard	DATE APPROVED May 2019
CAD BY C. Shearer	DIV. ENGINEER S. Townsen
CHECKED BY K. Roske	

X REGISTERED PROFESSIONAL ENGINEER 63222PE OREGON JULY 9, 2001 NICOLE OTT BLANCHARD
Digital Signature
Expires 12/31/2019

APPROVALS:
REG. PROF. ENGR. NO. 84470PE
REG. PROF. ENGR. NO. 51538PE

PBOT
PORTLAND BUREAU OF TRANSPORTATION
DAN SALTZMAN COMMISSIONER
STEVE TOWNSEN, P.E. CITY ENGINEER

CITY OF PORTLAND OREGON 1851

N.E. 47th Ave: N.E. Columbia Blvd. - N.E. Cornfoot Rd.

Retaining Wall 5 Plan and Profile

1/4 SECTION 2841,2842 2941,2942
PROJECT NO. PBOT T00539 BES E10853
SHEET NO. R-4

Plot Date: 5/16/2019 3:10:17 PM Filename: S:_II_Design\T00539 - NE 47th Ave LID - Columbia Blvd - Cornfoot Rd\CAD\PLAN_SHEETS\SHT R-04 RETAINING WALL PLAN AND PROFILE\PLOT_SHT_R-04.dgn

DocuSign Envelope ID: AD0DEB8A-59D1-4DDE-AE61-5C699AC8BFE3

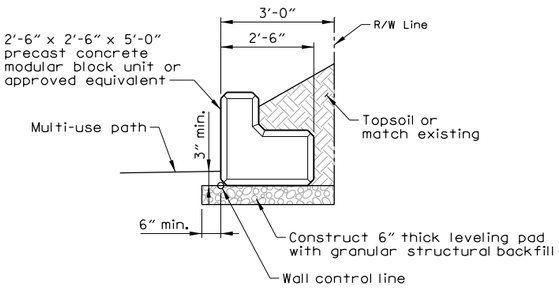

Modular Gravity Retaining Wall Section (A) R-2
Scale: ½" = 1'-0"

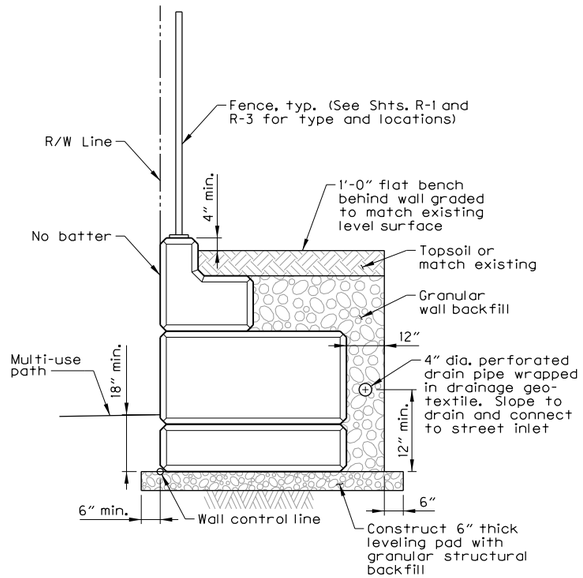

Modular Gravity Retaining Wall Section (B) R-1 R-3
Scale: ½" = 1'-0"

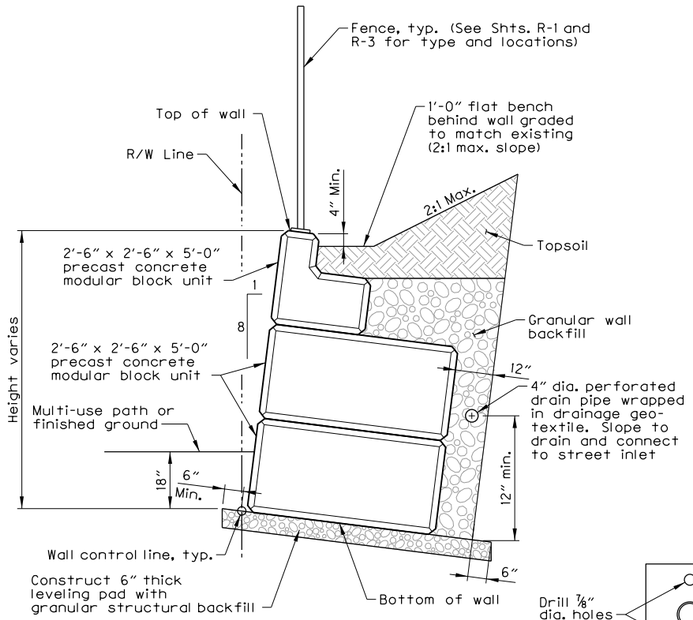

Modular Gravity Retaining Wall Section (C) R-4
Scale: ½" = 1'-0"

Fence Notes:

1. All fence posts shall be installed plumb in the longitudinal direction and plumb in transverse direction.
2. All steel plates and shapes shall conform to ASTM Specification A709 Grade 36.
3. Unless noted otherwise, concrete anchors shall be A307 ¾" diameter resin bonded anchors with a minimum pullout strength of 18,000 lbs. Anchors shall be installed according to manufacturer's instructions. Anchor embedment shall be such that the required strength is achieved, but not less than 6".

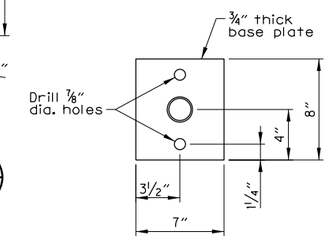

Base Plate Plan, Typ.

Retaining Wall General Notes:

1. All exposed blocks shall have Quarrystone Face finish or approved equivalent.
2. Wall design provides minimum factor of safety of 1.5 against sliding and 2.0 against overturning. Assumed friction factor between base of wall and leveling pad is 0.493.
3. Design Parameters:
   Backfill/embankment soil unit weight = 115 lbs./ft.
   Angle of internal friction of backfill/embankment soil = 29°
   Live load surcharge = 250 psf
4. Excavate to the bottom of leveling pad and make excavation available for inspection by the geotechnical engineer. Where directed, over excavate and construct granular structure bearing pad to the depth specified by the engineer.

H=2'-6"
560 PSF

Assembly Details

Modular Gravity Retaining Wall Section A

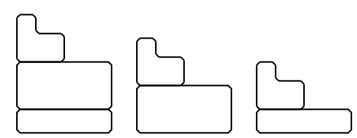

H=6'-3" 1835 PSF
H=5'-0" 1301 PSF
H=3'-9" 874 PSF

Assembly Details

Modular Gravity Retaining Wall Section B

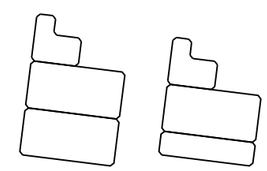

H=7'-6" 2002 PSF
H=6'-3" 1434 PSF

Assembly Details

Modular Gravity Retaining Wall Section C

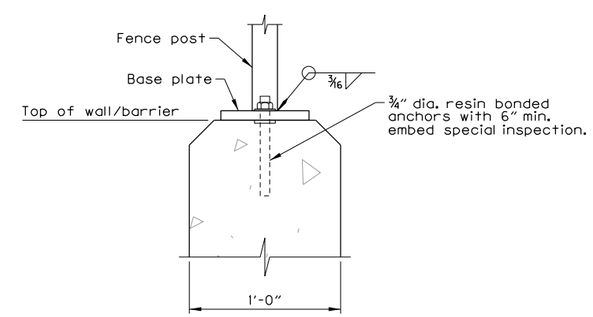

Base Plate Section

Fence Mount Retaining Wall (D) -
Scale: 2" = 1'-0"

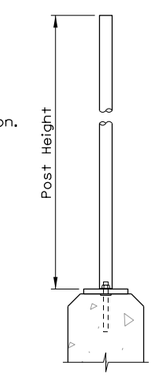

Fence Section (E) -
Scale: 1" = 1'-0"

NO.	DATE	DESCRIPTION	APPD.

REVISION

DESIGNED BY F. Mangubat | DATE APPROVED May 2019
CAD BY C. Shearer | DIV. ENGINEER S. Townsen
CHECKED BY C. Glasgow

X REGISTERED PROFESSIONAL ENGINEER 80798PE OREGON June 11, 2008 JOHN CAMERON GLASGOW
Digital Signature
Expires 06/30/19

APPROVALS:
John Cameron Glasgow — REG. PROF. ENGR. NO. 80798PE
Steve Townsen — REG. PROF. ENGR. NO. 51538PE

PBOT PORTLAND BUREAU OF TRANSPORTATION
DAN SALTZMAN COMMISSIONER
STEVE TOWNSEN, P.E. CITY ENGINEER

CITY OF PORTLAND OREGON 1851

N.E. 47th Ave: N.E. Columbia Blvd. - N.E. Cornfoot Rd.

Miscellaneous Structural Details

1/4 SECTION 2841,2842 2941,2942
PROJECT NO. PBOT T00539 BES E10853
SHEET NO. R-5

Plot Date: 5/16/2019 3:10:18 PM Filename: S:_II_Design\T00539 - NE 47th Ave LID - Columbia Blvd - Cornfoot Rd\CAD\PLAN_SHEETS\SHT R-05 MISC STRUCTURAL AND SLOPE DETAILS\PLOT_SHT_R-05.dgn

DocuSign Envelope ID: AD0DEB8A-59D1-4DDE-AE61-5C699AC8BFE3

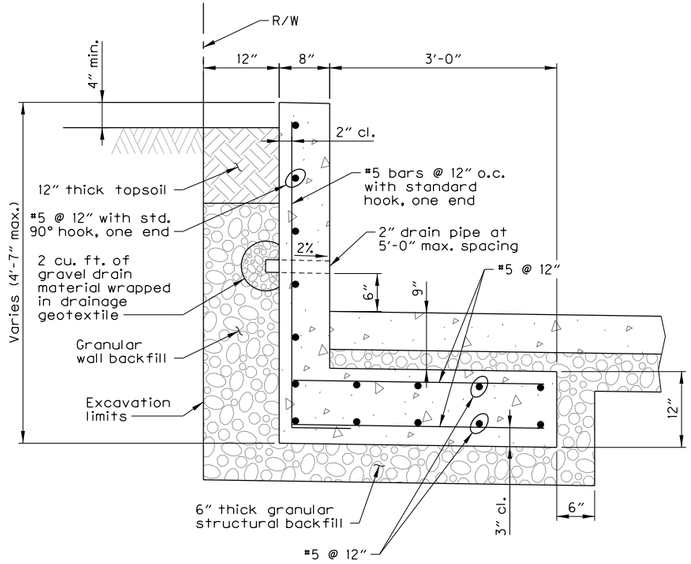

Cantilever Retaining Wall Section (A / R-3)

Scale: 1" = 1'-0"

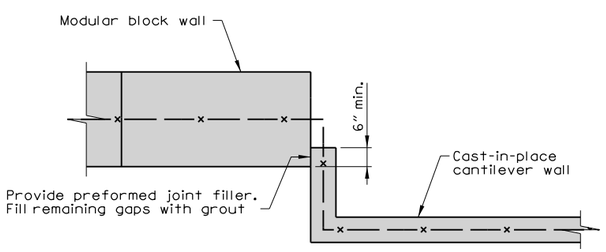

Plan

Wall Interface Detail (C / R-4)

Scale: ½" = 1'-0"

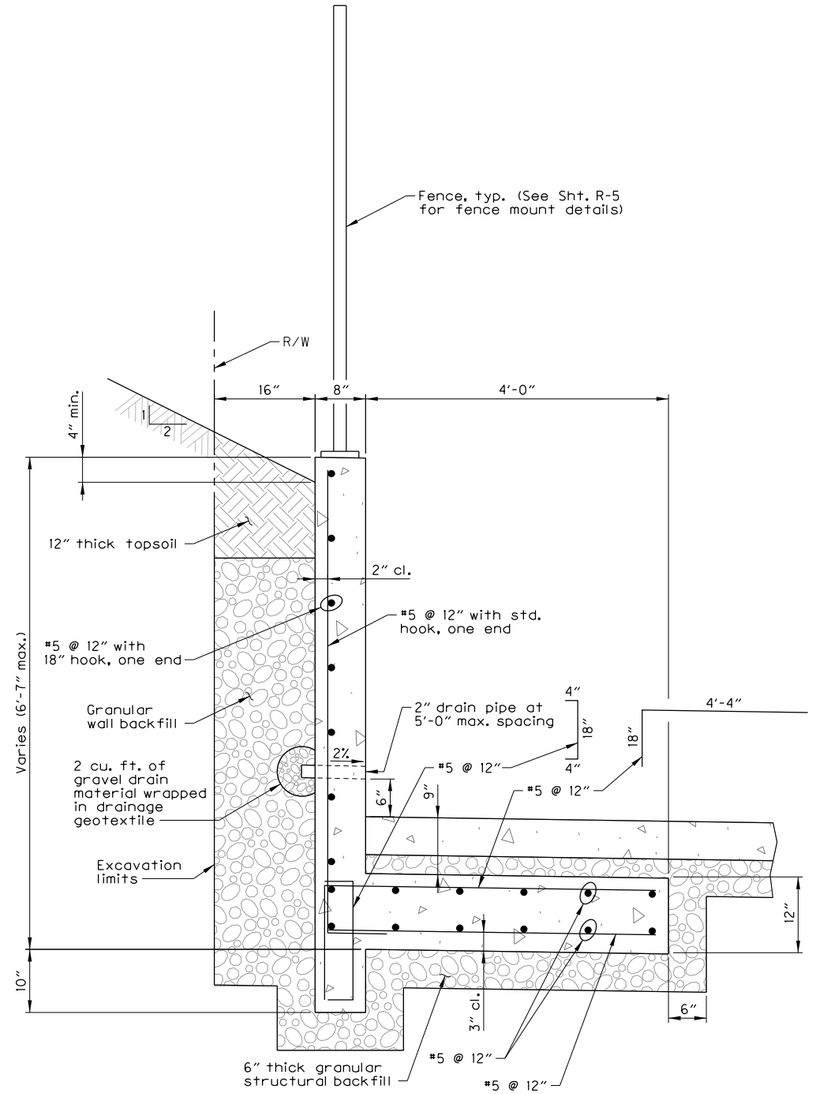

Cantilever Retaining Wall Section (B / R-4)

Scale: 1" = 1'-0"

Retaining Wall General Notes

1. Provide Class 4,000 psi - 1½", 1" or ¾" concrete.
2. Provide all reinforcing steel according to ASTM Specification A706 or ASTM A615 Grade 60.
3. Place bars 2" clear of the nearest face of concrete unless shown otherwise.
4. Wall design provides minimum factor of safety of 1.5 against sliding and 2.0 against overturning.
5. Design parameter: Backfill/embankment soil unit weight = 110 lbs./ft. Angle of internal friction of backfill/embakement soil is 30°. Live load surcharge=50 psf.
6. Make footing excavation available for inspection by the geotechnical engineer. Where directed, over-excavate and construct granular structural bearing pad to the depth specified by the engineer.

NO.	DATE	DESCRIPTION	APPD.

REVISION

DESIGNED BY	F. Mangubat
CAD BY	C. Shearer
CHECKED BY	C. Glasgow
DATE APPROVED	May 2019
DIV. ENGINEER	S. Townsen

X REGISTERED PROFESSIONAL ENGINEER 80798PE OREGON June 11, 2008 JOHN CAMERON GLASGOW
Digital Signature
Expires 06/30/19

APPROVALS:

John Cameron Glasgow — REG. PROF. ENGR. NO. 80798PE

Steve Townsen — REG. PROF. ENGR. NO. 51538PE

PBOT PORTLAND BUREAU OF TRANSPORTATION
DAN SALTZMAN — COMMISSIONER
STEVE TOWNSEN, P.E. — CITY ENGINEER

CITY OF PORTLAND, OREGON 1851

N.E. 47th Ave: N.E. Columbia Blvd. - N.E. Cornfoot Rd.

Miscellaneous Structural Details

1/4 SECTION: 2841,2842 2941,2942

PROJECT NO.: PBOT T00539 BES E10853

SHEET NO.: R-6

Plot Date: 5/16/2019 3:10:27 PM Filename: S:_II_Design\T00539 - NE 47th Ave LID - Columbia Blvd - Cornfoot Rd\CAD\PLAN_SHEETS\SHT R-06 MISC STRUCTURAL AND SLOPE DETAILS\PLOT_SHT_R-06.dgn

DocuSign Envelope ID: 9A364875-6502-4686-9E9D-D3A5C6A5F2C0

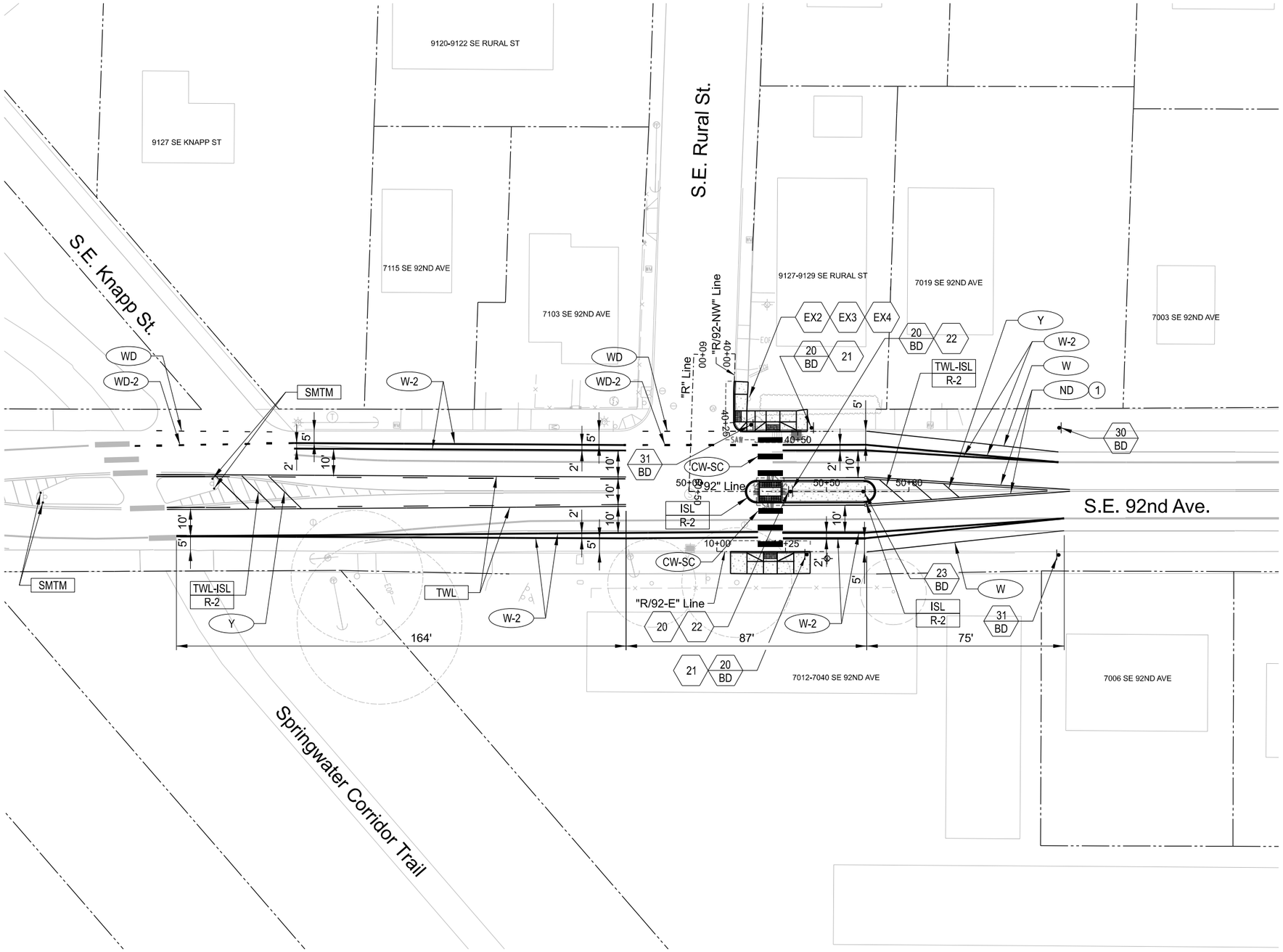

Striping Notes:

1.) Remove all conflicting striping and pavement markings.

2.) Refer to C.O.P. Std. Drg. No's P-434, P-435 & P-436 & O.D.O.T. Std. Drg. No's TM500, TM501 & TM503 for pavement marking details

3.) All longitudinal line work to be non-profile surface extruded thermoplastic.

4.) All striping dimensions are taken from center of stripe to center of stripe.

5.) All other transverse line work, legends, symbols, and arrows to be Type "B-HS" thermoplastic.

6.) All markings to be traversed by bicyclists (bike lane stencils, shared use path markings, etc.) to be 90 mil. thick and Type "B-HS"

Signing Notes:

1.) Hexagon indicators refer to Traffic Sign Bubble Legend shown on sheet S-3.

2.) Refer to Traffic Sign Number Legend on sheet S-3 for sign information.

3.) Refer to Sign and Post Data Table on Sheet S-4 for sign support and hardware information.

4.) Refer to signing standard drawings shown on PBOT Std. Drg. Nos. P-400 to P-420 for sign fabrication and installation details.

5.) All new signs shall be mounted with a minimum of 5-feet of horizontal clearance from adjacent fire hydrants.

6.) SMTM 36" Surface Mounted Tubular Markers.

Construction Notes

1 Install yellow bi-directional Type I reflector per ODOT Std. Drg. No. TM502, Detail ND R-20, modified with 12' spacing instead of 20'.

0 20 40 60 80
FEET

NO.	DATE	DESCRIPTION	APPD.
		REVISION	

DESIGNED BY S. Kao
CAD BY C. Shearer
PBOT SUPV. J. Jeffrey
DATE APPROVED Aug. 2022

X REGISTERED PROFESSIONAL ENGINEER 16660PE OREGON JULY 20, 1993 JEANNE-MARIE JEFFREY
Digitally Signed
Expires 6/30/23

APPROVALS:
Wendy S. Peters Cawley — ENGINEER, 19146PE
Steve Townsen — 538PE

PBOT PORTLAND BUREAU OF TRANSPORTATION
JO ANN HARDESTY COMMISSIONER
STEVE TOWNSEN, P.E. CITY ENGINEER

CITY OF PORTLAND OREGON 1851

Lents Crossings: 92nd between Mt Scott Blvd and Mitchell, SE
Fixing Our Streets - Sidewalks
Permanent Signing and Striping Plan
S.E 92nd Ave. at S.E. Rural St.

1/4 SECTION 3639 3640,3740
PROJECT NO. T01142
SHEET NO. S-1

Plot Date: 8/16/2022 6:20:06 AM Filename: S:_JL_Design_Safe Routes to Schools\T01142 - 92nd at Ellis & Rural - Woodstock at 86th, SE\CAD\PLAN_SHEETS\SHT S-01PERMANENT SIGNING AND STRIPING PLAN\PLOT_SHT_S-01.dgn

DocuSign Envelope ID: 9A364875-6502-4686-9E9D-D3A5C6A5F2C0

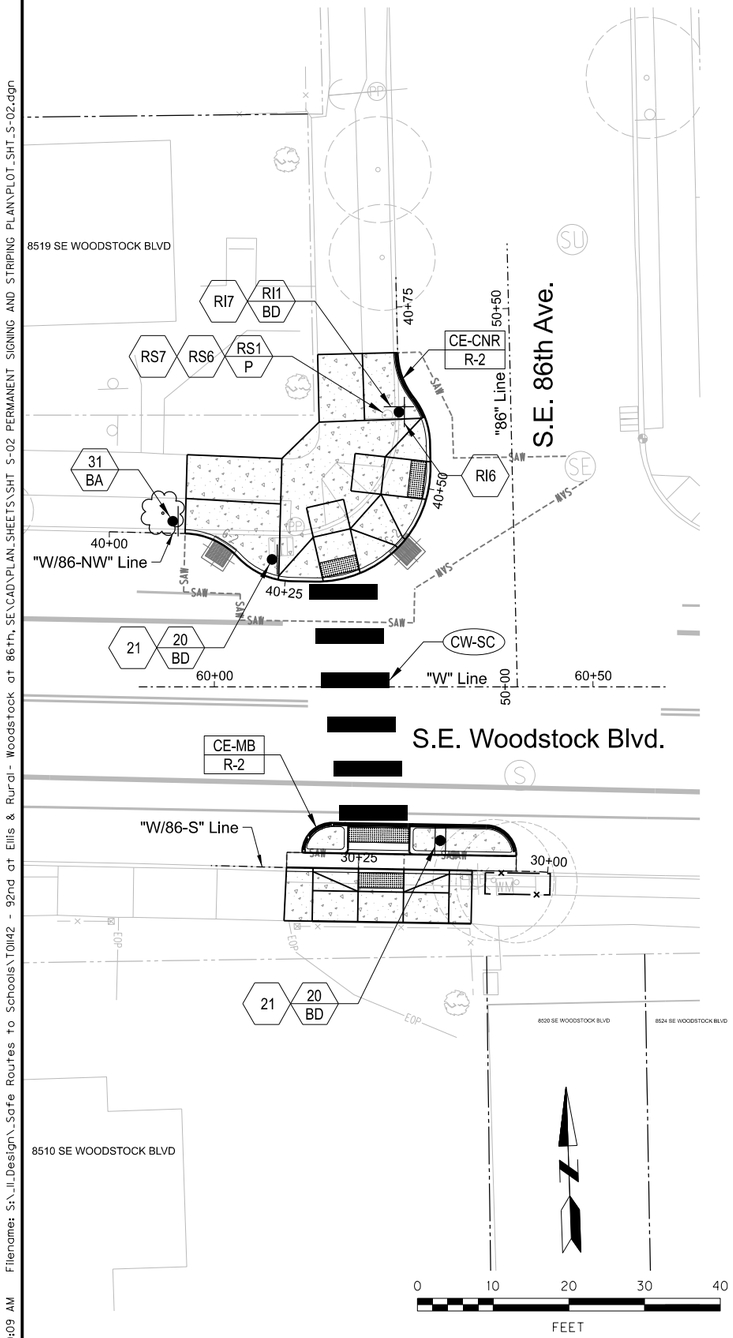

Striping Notes:

1.) Remove all conflicting striping and pavement markings.

2.) Refer to C.O.P. Std. Drg. No's P-434 & O.D.O.T. Std. Drg. No. TM503 for pavement marking details.

3.) All longitudinal line work to be non-profile surface extruded thermoplastic.

4.) All striping dimensions are taken from center of stripe to center of stripe.

5.) All other transverse line work, legends, symbols, and arrows to be Type "B-HS" thermoplastic.

6.) All markings to be traversed by bicyclists (bike lane stencils, shared use path markings, etc.) to be 90 mil. thick and Type "B-HS".

Signing Notes:

1.) Hexagon indicators refer to Traffic Sign Bubble Legend shown on sheet S-3.

2.) Refer to Traffic Sign Number Legend on sheet S-3 for sign information.

3.) Refer to Sign and Post Data Table on Sheet S-4 for sign support and hardware information.

4.) Refer to signing standard drawings shown on PBOT Std. Drgs. P-400 to P-420 for sign fabrication and installation details.

5.) All new signs shall be mounted with a minimum of 5-feet of horizontal clearance from adjacent fire hydrants.

Construction Notes

1 Install yellow bi-directional Type I reflector per ODOT Std. Drg. No. TM502, Detail (ND / R-20), modified with 12' spacing instead of 20'.

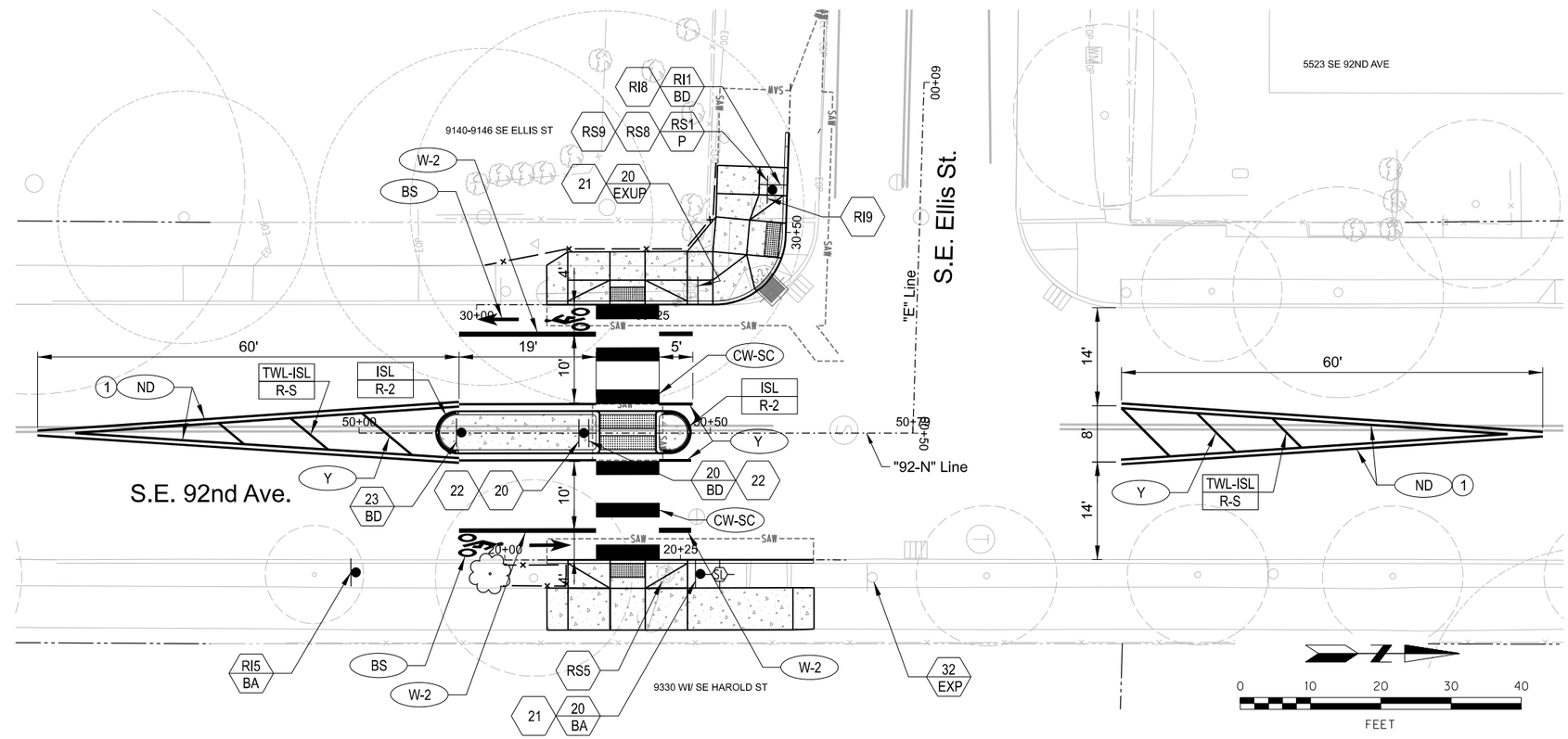

NO.	DATE	DESCRIPTION	APPD.

REVISION

DESIGNED BY S. Kao
CAD BY C. Shearer
PBOT SUPV. J. Jeffrey
DATE APPROVED Aug. 2022

X REGISTERED PROFESSIONAL ENGINEER 16660PE OREGON JULY 20, 1993 JEANNE-MARIE JEFFREY
Digitally Signed
Expires 6/30/23

APPROVALS:

Wendy S. Peters Cawley — ENGINEER, 19146PE

Steve Townsen — 538PE

PBOT PORTLAND BUREAU OF TRANSPORTATION
JO ANN HARDESTY — COMMISSIONER
STEVE TOWNSEN, P.E. — CITY ENGINEER

CITY OF PORTLAND, OREGON 1851

Lents Crossings: 92nd between Mt Scott Blvd and Mitchell, SE Fixing Our Streets - Sidewalks

Permanent Signing and Striping Plan S.E Woodstock Blvd. at S.E. 86th Ave. S.E. Ellis St. at S.E. 92nd Ave.

1/4 SECTION 3639 3640,3740
PROJECT NO. T01142
SHEET NO. S-2

Plot Date: 8/16/2022 6:20:09 AM Filename: S:_IL_Design_Safe Routes to Schools\T01142 - 92nd at Ellis & Rural- Woodstock at 86th, SE\CAD\PLAN_SHEETS\SHT S-02 PERMANENT SIGNING AND STRIPING PLAN\PLOT_SHT_S-02.dgn

DocuSign Envelope ID: 9A364875-6502-4686-9E9D-D3A5C6A5F2C0

Traffic Sign Bubble Legend

- N — Install new sign (N)
- N M — Install new sign (N) on sign support (M)
- N EXM — Install new sign (N) on existing sign support (M)
- RIN — Reinstall existing sign (N)
- RIN M — Reinstall existing sign (N) on new sign support (M)
- RIN RIM — Reinstall existing sign (N) and reinstall existing sign support (M)
- RXN — Remove existing sign(N)
- RXN M — Remove existing sign(N) and sign support (M)
- RSN — Remove and save existing sign (N)
- RSN M — Remove and save existing sign (N) and remove sign support (M)
- RXN EXM — Remove existing sign (N) and maintain and protect existing sign support (M)
- RSN EXM — Remove and save existing sign (N) and protect existing sign support (M)
- RSN RSM — Remove and save existing sign (N) and remove and save existing sign support (M)
- RXM — Remove existing sign support (M)
- M — Install sign support (M) only
- EXN — Maintain and protect existing sign (N) and support

N = Sign Number. See "Traffic Signs" Legend for the numbers.

M = Material for Pole or Post

Material Options are:

BA = Breakaway Anchor BD = Breakaway Dome

LP = Light Pole P = Pipe Post PP = Power Pole

SP = Signal Pole UP = Utility Pole W = Wood Post

Traffic Sign Number Legend

R1010
R1-1
30" X 30"
Sign No. 1

S1099
S1-1
36" X 36"
Sign No. 2

S1108G
W16-9P
24" X 12"
Sign No. 3

R6100
R5-2
24" X 24"
Sign No. 4

P1000L
12" X 18"
Sign No. 5

PBOT G5501
VAR. X 8"
Sign No. 6-9

Denotes existing sign

W3210
W11-2
30" X 30"
Sign No. 20

S1105
W16-7P
24" X 12"
Sign No. 21

S1106
W16-7P
24" X 12"
Sign No. 22

R5440
R4-7
24" X 30"
Sign No. 23

STREET NAME SIGN CHART		
SIGN #	STREET NAME	BLOCK #
6	SE 86th Av	-
7	SE Woodstock Blvd	6000
8	SE 92nd Av	-
9	SE Ellis St	5600

P1000L
12" X 18"
Sign No. 30

P1000R
12" X 18"
Sign No. 31

P1000
12" X 18"
Sign No. 32

NO.	DATE	DESCRIPTION	APPD.

REVISION

DESIGNED BY S. Kao
CAD BY C. Shearer
PBOT SUPV. J. Jeffrey
DATE APPROVED Aug. 2022

X REGISTERED PROFESSIONAL ENGINEER 16660PE OREGON JULY 20, 1993 JEANNE-MARIE JEFFREY
Digitally Signed
Expires 6/30/23

APPROVALS:
Wendy S. Peters Cawley — ENGINEER, 19146PE
Steve Townsen — 538PE

PBOT
PORTLAND BUREAU OF TRANSPORTATION
JO ANN HARDESTY — COMMISSIONER
STEVE TOWNSEN, P.E. — CITY ENGINEER

CITY OF PORTLAND OREGON 1851

Lents Crossings: 92nd between Mt Scott Blvd and Mitchell, SE Fixing Our Streets - Sidewalks

Permanent Signing Legends

1/4 SECTION 3639 3640,3740
PROJECT NO. T01142
SHEET NO. S-3

Plot Date: 8/16/2022 6:20:11 AM Filename: S:_IL_Design_Safe Routes to Schools\T01142 - 92nd at Ellis & Rural- Woodstock at 86th_SE\CAD\PLAN_SHEETS\SHT S-03 PERMANENT SIGNING LEGEND\PLOT_SHT_S-03.dgn

DocuSign Envelope ID: 9A364875-6502-4686-9E9D-D3A5C6A5F2C0

SIGN NO.	SHEET NO.	STREET NAME	SIGN LOCATION 1/ (STA. & DIR.)	SIGN CODE: PBOT	SIGN CODE: ODOT	SIGN CODE: MUTCD	SIGN DIMENSION: WIDTH (IN INCHES)	SIGN DIMENSION: HEIGHT (IN INCHES)	SIGN TYPE (PER SECS. 940 & 2910 COP STD. SPECS.)	SUB-STRATE: ALUM. COMPOSITE	SUB-STRATE: SHEET ALUM.	SUB-STRATE: EXTRUDED ALUM.	COATING: ANTI-GRAFFITI	COLOR 2/ BACKGROUND: NON-REFLECTIVE	BACKGROUND: ASTM TYPE III OR TYPE IV	BACKGROUND: ASTM TYPE IX OR XI	LEGEND: ASTM TYPE III OR TYPE IV	LEGEND: ASTM TYPE IX OR XI	LEGEND: NON-REFLECTIVE
1	S-2	"86" Line	50+37LT	R1010		R1-1	30	30	EXIST.										
1	S-2	"E" Line	60+20RT	R1010		R1-1	30	30	EXIST.										
5	S-2	"92-N" Line	50+00RT	P1000L			12	18	EXIST.										
6	S-2	"86" Line	50+37LT	G5501			VAR.	8	EXIST.										
7	S-2	"86" Line	50+37LT	G5501			VAR.	8	EXIST.										
8	S-2	"E" Line	60+20RT	G5501			VAR.	8	EXIST.										
9	S-2	"E" Line	60+20RT	G5501			VAR.	8	EXIST.										
20	S-1	"92" Line	50+40RT	W3210		W11-2	30	30	Y1		X		X		Y				BK
20	S-1	"92" Line	50+40RT	W3210		W11-2	30	30	Y1		X		X		Y				BK
20	S-1	"92" Line	50+42RT	W3210		W11-2	30	30	Y1		X		X		Y				BK
20	S-1	"92" Line	50+46LT	W3210		W11-2	30	30	Y1		X		X		Y				BK
20	S-2	"W" Line	60+08LT	W3210		W11-2	30	30	Y1		X		X		Y				BK
20	S-2	"W" Line	60+30RT	W3210		W11-2	30	30	Y1		X		X		Y				BK
20	S-2	"92-N" Line	50+32RT	W3210		W11-2	30	30	Y1		X		X		Y				BK
20	S-2	"92-N" Line	50+32RT	W3210		W11-2	30	30	Y1		X		X		Y				BK
20	S-2	"92-N" Line	50+47LT	W3210		W11-2	30	30	Y1		X		X		Y				BK
20	S-2	"92-N" Line	50+49RT	W3210		W11-2	30	30	Y1		X		X		Y				BK
21	S-1	"92" Line	50+42RT	S1105		W16-7P	24	12	Y1		X		X		Y				BK
21	S-1	"92" Line	50+46LT	S1105		W16-7P	24	12	Y1		X		X		Y				BK
21	S-2	"W" Line	60+08LT	S1105		W16-7P	24	12	Y1		X		X		Y				BK
21	S-2	"W" Line	60+30RT	S1105		W16-7P	24	12	Y1		X		X		Y				BK
21	S-2	"92-N" Line	50+47LT	S1105		W16-7P	24	12	Y1		X		X		Y				BK
21	S-2	"92-N" Line	50+49RT	S1105		W16-7P	24	12	Y1		X		X		Y				BK
22	S-1	"92" Line	50+40RT	S1106		W16-7P	24	12	Y1		X		X		Y				BK
22	S-1	"92" Line	50+40RT	S1106		W16-7P	24	12	Y1		X		X		Y				BK
22	S-2	"92-N" Line	50+32RT	S1106		W16-7P	24	12	Y1		X		X		Y				BK
22	S-2	"92-N" Line	50+32RT	S1106		W16-7P	24	12	Y1		X		X		Y				BK
23	S-1	"92" Line	50+63LT	R5540		R4-1	24	30	Y1		X		X		W				BK
23	S-2	"92-N" Line	50+14LT	R5540		R4-1	24	30	Y1		X		X		W				BK
30	S-1	"92" Line	51+35LT	P1000L			12	18	W13		X		X	W					BK,R
31	S-1	"92" Line	50+22LT	P1000R			12	18	W13		X		X	W					BK,R
31	S-1	"92" Line	51+36LR	P1000R			12	18	W13		X		X	W					BK,R
31	S-2	"W" Line	59+95LT	P1000R			12	18	W13		X		X	W					BK,R
32	S-2	"92-N" Line	50+73RT	P1000D			12	18	W13		X		X	W					BK,R

SIGN NO.	SIGN LOCATION	MOUNT: SINGLE PIPE POST	TWO PIPE POSTS	EXISTING PIPE POST	BIKE RACK SIGN SUPPORT	SURFACE MOUNTED FLEXIBLE SIGN SUP.	WOOD SIGNAL / STREET LIGHT POLE	STEEL SIGNAL / STREET LIGHT POLE	TRIANGULAR BASE BREAKAWAY	HARDWARE: U BOLT SIGN BRACKETS	BACK TO BACK SIGN BRACKET	DOME POST CAP	EXTRUDED TRAFFIC SIGN BRACKETS	FLARED LEG BRACKETS W/ BANDING AND BANDING CLIPS	STRAIGHT LEG BRACKETS W/ BANDING AND BANDING CLIPS	STRONG-BACK CHANNELS	SINGLE SNS POST CAP (6")	DOUBLE SNS CROSS PIECE (6")	SINGLE SNS POST CAP (12")	DOUBLE SNS CROSS PIECE (12")	SNS CANTILEVER BRACKET	SNS CANTILEVER EXTENSION
1	50+37LT	X											X									
1	60+20RT	X											X									
5	50+00RT	X								X		X										
6	50+37LT																	X				
7	50+37LT																X					
8	60+20RT																X					
9	60+20RT																	X				
20	50+40RT	X									X	X										
20	50+40RT																					
20	50+42RT	X										X	X									
20	50+46LT	X										X	X									
20	60+08LT	X										X	X									
20	60+30RT	X										X	X									
20	50+32RT	X									X	X										
20	50+32RT																					
20	50+47LT						X								X	X						
20	50+49RT	X										X	X									
21	50+42RT												X									
21	50+46LT												X									
21	60+08LT												X									
21	60+30RT												X									
21	50+47LT						X								X	X						
21	50+49RT												X									
22	50+40RT										X											
22	50+40RT																					
22	50+32RT										X											
22	50+32RT																					
23	50+63LT	X										X	X									
23	50+14LT	X										X	X									
30	51+35LT	X								X		X										
31	50+22LT	X								X		X										
31	51+36LR	X								X		X										
31	59+95LT	X								X		X	X									
32	50+73RT			X						X												

SIGN NO.	SIGN LOCATION	POST SIZE IN INCHES (BASED ON ESTIMATED LENGTH)	POST LENGTH IN INCHES (MUST BE FIELD VERIFIED)	FOOTING TYPE: BREAKAWAY DOME ASSEMBLY	FOOTING TYPE: BREAKAWAY ANCHOR ASSEMBLY	MIN. DEPTH 3/	P-400	P-405	P-406	P-407	P-410	P-411	P-412	P-413	P-420	TM602	TM675	TM680	REMARKS
1	50+37LT	2	116	X			X		X		X								
1	60+20RT	2	116	X			X		X		X								
5	50+00RT	2	104		X		X	X			X								
6	50+37LT						X						X		X				
7	50+37LT						X						X		X				
8	60+20RT						X						X		X				
9	60+20RT						X						X		X				
20	50+40RT	2	128	X			X		X		X								FACE NORTH
20	50+40RT						X												BACK-TO-BACK ON SIGN 20; FACE SOUTH
20	50+42RT	2	128	X			X		X		X								
20	50+46LT	2	128	X			X		X		X								
20	60+08LT	2	128	X			X		X		X								
20	60+30RT	2	128	X			X		X		X								
20	50+32RT	2	128	X			X		X		X								FACE NORTH
20	50+32RT						X												BACK-TO-BACK ON SIGN 20; FACE SOUTH
20	50+47LT						X					X							
20	50+49RT	2	128		X		X	X			X								
21	50+42RT						X				X								
21	50+46LT						X				X								
21	60+08LT						X				X								
21	60+30RT						X				X								
21	50+47LT						X					X							
21	50+49RT						X				X								
22	50+40RT						X												FACE NORTH
22	50+40RT						X												BACK-TO-BACK ON SIGN 22; FACE SOUTH
22	50+32RT						X												FACE NORTH
22	50+32RT						X												BACK-TO-BACK ON SIGN 22; FACE SOUTH
23	50+63LT	2	92	X			X		X		X								
23	50+14LT	2	92	X			X		X		X								
30	51+35LT	2	104	X			X		X		X								
31	50+22LT	2	104	X			X		X		X								
31	51+36LR	2	104	X			X		X		X								
31	59+95LT	2	104	X			X		X		X								
32	50+73RT						X				X								

1/ IF SIGN LOCATION IS IN CONFLICT WITH OR BLOCKED BY EXISTING STREET FEATURES CONTACT THE ENGINEER PRIOR TO INSTALLATION.

2/ BK=BLACK
BL=BLUE
BR=BROWN
FY=FLOURESCENT YELLOW
G=GREEN
O=ORANGE
R=RED
RB=RED-BLUE
SW=SILVER-WHITE
W=WHITE
Y=YELLOW
YG=YELLOW-GREEN
DG=DARK GRAY

3/ MINIMUM DEPTH OF FOOTING FOR TRIANGULAR BASE BREAKAWAY INSTALLATION IS BASED ON 2' DIAMETER FOOTING. FOR ADDITIONAL INFORMATION SEE ODOT STANDARD DRAWING TM602.

Plot Date: 8/16/2022 6:20:14 AM Filename: S:_...Design_Safe Routes to Schools\T01142 - 92nd at Ellis & Rural - Woodstock at 86th_SE\CAD\PLAN_SHEETS\SHT S-04 SIGN AND POST DATA TABLE\PLOT_SHT_S-04.dgn

NO.	DATE	DESCRIPTION	APPD.
		REVISION	

DESIGNED BY: S. Kao
DATE APPROVED: Aug. 2022
CAD BY: C. Shearer
PBOT SUPV.: J. Jeffrey

X REGISTERED PROFESSIONAL ENGINEER 16660PE OREGON JULY 20, 1993 JEANNE-MARIE JEFFREY
Digitally Signed
Expires 6/30/23

APPROVALS:
Wendy S. Peters Cawley ...ENGINEER, 19146PE
Steve Townsen 538PE

PBOT
PORTLAND BUREAU OF TRANSPORTATION
JO ANN HARDESTY COMMISSIONER
STEVE TOWNSEN, P.E. CITY ENGINEER

CITY OF PORTLAND, OREGON 1851

Lents Crossings: 92nd between Mt Scott Blvd and Mitchell, SE Fixing Our Streets - Sidewalks

Sign & Post Data Table

1/4 SECTION: 3639 3640,3740
PROJECT NO.: T01142
SHEET NO.: S-4

PRELIMINARY REVIEW
9/21/2022

City of Portland Bureau of Transportation

Plans for Proposed Project

Grading, Drainage, Paving, Striping, Signing & Roadside Development

122nd Ave Safety Improve, Ph I

Multnomah County
December 2022

Project Location

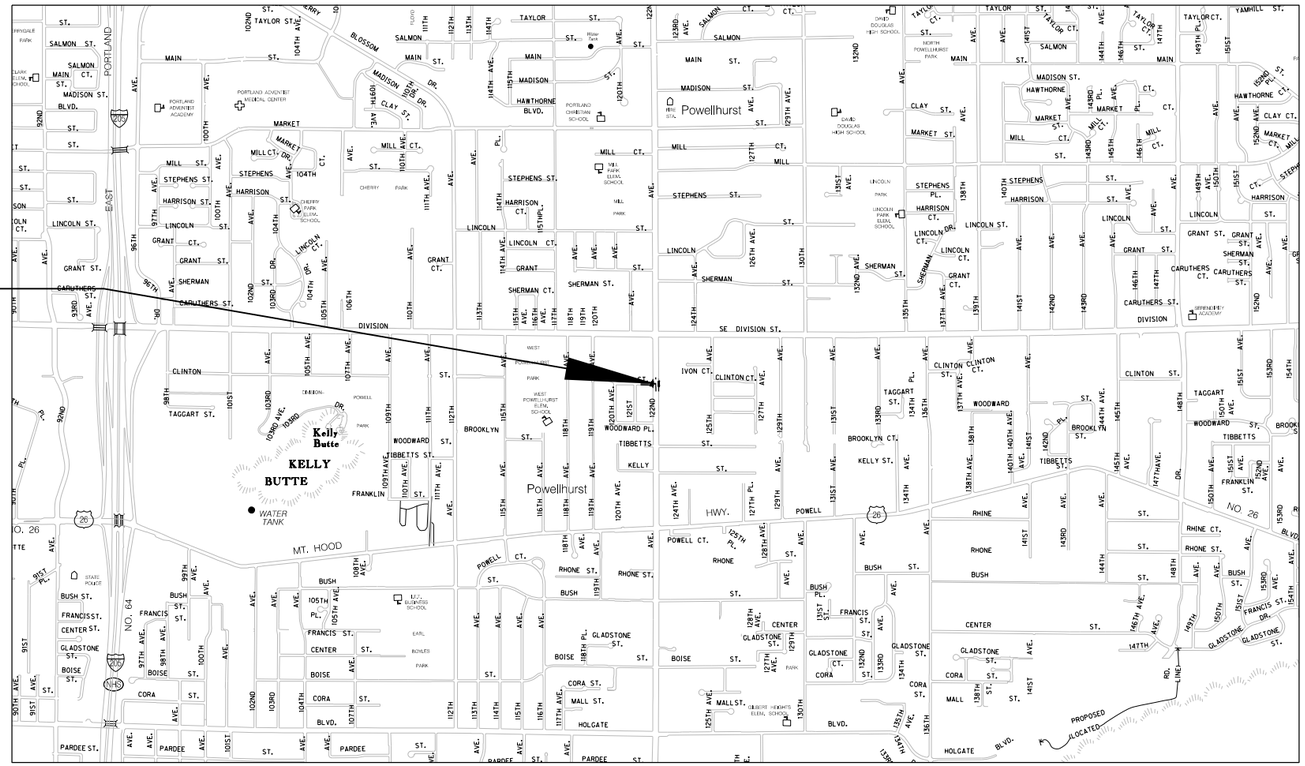

LOCATION MAP

0 1000 2000 3000 4000
FEET

Overall Length of Project - 75 Feet

T. 1 S., R. 2 E., W.M.

NOTICE TO EXCAVATORS:
ATTENTION: OREGON LAW REQUIRES YOU TO FOLLOW RULES ADOPTED BY THE OREGON UTILITY NOTIFICATION CENTER. THOSE RULES ARE SET FORTH IN OAR 952-001-0010 THROUGH OAR 952-001-0090. YOU MAY OBTAIN COPIES OF THE RULES BY CALLING THE CENTER.
RULES ARE ALSO LOCATED AT WWW.DIGSAFELYOREGON.COM
NOTE: THE TELEPHONE NUMBER FOR THE OREGON UTILITY NOTIFICATION CENTER IS (503)-232-1987.

POTENTIAL UNDERGROUND FACILITY OWNERS

Dig Safely.

Website: http://www.callbeforeyoudig.org/
Call the Oregon One-Call Center
DIAL 811 or 1-800-332-2344

EMERGENCY TELEPHONE NUMBERS

NW NATURAL GAS	
M-F 7am-6pm	503-226-4211 Ext.4313
AFTER HOURS	503-226-4211
PGE	503-464-7777
CENTURYLINK	1-800-573-1311
BUREAU OF TRANS./MAINT. OPERATIONS	503-823-1700
CITY WATER	503-823-4874
VERIZON	1-800-483-1000

NO.	DATE	DESCRIPTION	APPD.

REVISION

DESIGNED BY R. Bennett	DATE APPROVED Sept. 2022
CAD BY C. Shearer	PBOT REVIEWER X. Reviewer
CHECKED BY X. Engineer	PBOT SUPV. X. Eng-Supv

REGISTERED PROFESSIONAL ENGINEER 19043PE OREGON May 15, 1997 RUTHANNE BENNETT
Expires 12/31/23

APPROVALS:

ENGINEERING MANAGER, PE

STEVE TOWNSEN, CITY ENGINEER, 51538PE

PBOT
PORTLAND BUREAU OF TRANSPORTATION
JO ANN HARDESTY — COMMISSIONER
STEVE TOWNSEN, P.E. — CITY ENGINEER

CITY OF PORTLAND OREGON 1851

122nd Ave Safety Improve, Ph I

Cover Sheet

1/4 SECTION	3343
PROJECT NO.	T00646
SHEET NO.	1

Plot Date: 9/21/2022 6:43:45 AM Filename: \\pdotnt\grp$cds_ll_Design\T00646 - 122nd Ave Safety Improve Ph I\CAD\PLAN_SHEETS\SHT 01COVER\PLOT_SHT_01.dgn