City of Portland

ADA Title II TRANSITION PLAN UPDATE

LEGISLATIVE HISTORY

Congress passed the Americans with Disabilities Act on July 26, 1990. This Civil Rights legislation was a critical milestone for creating more inclusion and access for persons with disabilities. Title II of the ADA covers programs, activities, and services of public entities and civic life.

The Department of Justice's Title II regulation adopted the general prohibitions of discrimination established under Section 504 of the Rehabilitation Act of 1973 and incorporated specific prohibitions of discrimination for the ADA. Title II provides protections to individuals with disabilities that are at least equal to those previously provided by the nondiscrimination provisions of Title V of the Rehabilitation Act.

Specifically, the City, and other public entities, may not, either directly or through contractual arrangements, do any of the following:
- Deny persons with disabilities equal opportunity to participate as members of advisory boards and commissions.
- Deny persons with disabilities equal opportunity to participate in services, programs, or activities
- In determining the location of facilities, make selections that have the effect of excluding or discriminating against persons with disabilities.

Title II of the ADA provides that the City and other public entities must identify and evaluate all programs, activities, and services and review all policies, practices, and procedures that govern administration of the entity's programs, activities, and services.

TRANSITION PLAN

Title II of the ADA requires that public entities having responsibility for or authority over facilities, streets, roads, sidewalks and/or other areas meant for public use to develop a Transition Plan to make their facilities meet the standards for Program Accessibility.

Program Accessibility means that a program, activity and/or service are accessible when viewed in its entirety. Simply put, a Transition Plan transitions inaccessible facilities into environments that are accessible to and functional for individuals with disabilities.

A final Transition Plan combines the findings from the facility evaluations, public rights-of-way evaluations, policy assessments and program evaluations. Each facility evaluation results in a complete list of architectural barriers and barrier removal actions. Not all of these barriers must be removed in order to provide program access. The first priority is to remove those barriers limiting access to programs.

Portland's Transition Plan process is divided into three parts;
- Facilities: buildings, parks, and their related grounds;
- Public rights-of-way: sidewalks and curb ramps; and
- Self-evaluation: access to programs for persons with disabilities.

The public rights-of-way evaluation and the self-evaluation are not included in this Plan and will be addressed in the future. The parks component of the plan will be completed in the spring of 2015. In compliance with the requirements of the ADA, the City will maintain in working order equipment and features that are required to provide access to individuals with disabilities.

ADA Title II
Transition Plan Update

City of Portland

ADA Title II TRANSITION PLAN UPDATE

ENTRANCES

Barriers	Design solutions

Threshold

Thresholds have a maximum total height of ½ inch.

With a maximum single vertical rise of ¼ inch.

ADA 414.2.5

Door exceeding vertical threshold.

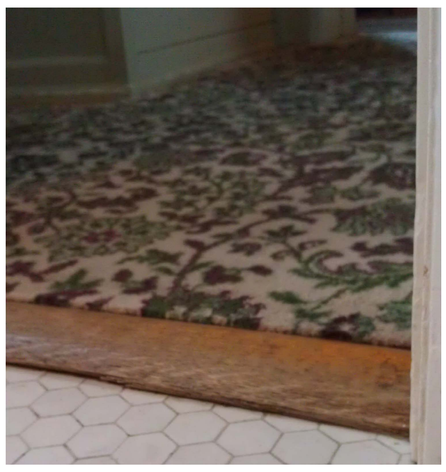

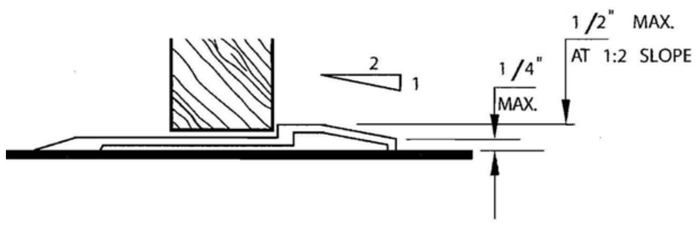

Section through a door showing slope ratios

Hardware

Door hardware should not require grasping, pinching and twisting.

Use the "closed fist" test.

ADA 309.4

Knob requires grasping and twisting to operate.

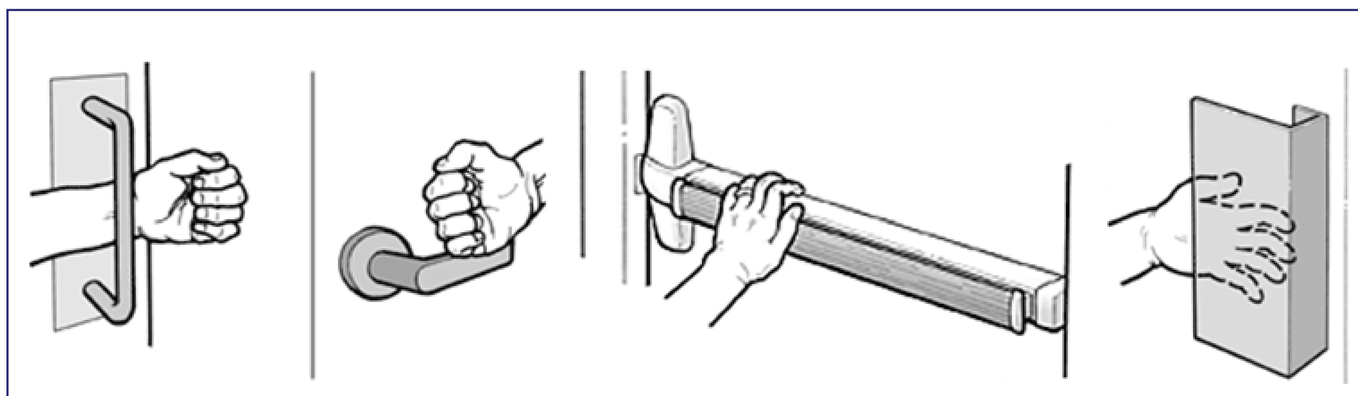

Door kick-plate

A smooth, uninterrupted bottom rail or kickplate that is 10 inches minimum high is provided on the push-side of the door, or the door has an uninterrupted surface.

ADA 404.2.10

Panic hardware is located on the push side of the door.

1

Picture Sources
1- http://www.activarcpg.com

City of Portland

ADA Title II TRANSITION PLAN UPDATE

ENTRANCES

Barriers

Entrance signs

At least 60 percent of all public entrances are accessible. ADA 206.4.1

Accessible entrances are noted with an international symbol of accessibility.
If an entry is not accessible there is a sign indicating the location of the accessible entry.

ADA 216.6

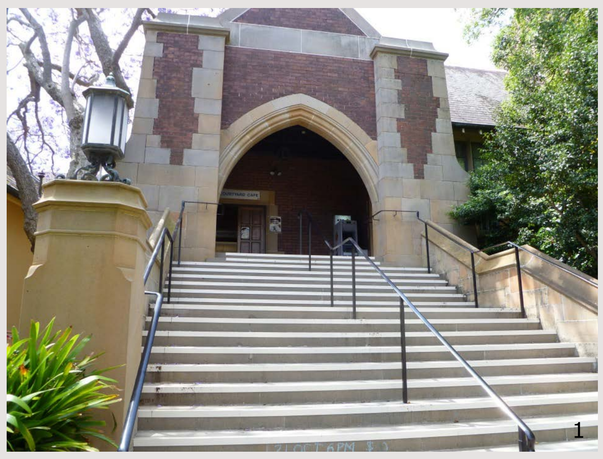

Sign indicating accessible entry is missing.

Design solutions

Sign position

A tactile and Braille sign identifies rooms for people with vision impairment. The bottom edge of the top row of tactile text can be located 60 inches max above the finished floor. The bottom edge of the lowest row of tactile text should be located 48 inches min above the floor. Signs need to be located out of the door-swing zone and so that an 18 inch by 18 inch clear space is centered on the sign

ADA 703

Sign location is a hazard for low vision individuals.

Maneuvering clearance door strike-edge

A clear floor space at the latch side of the door, in the pull direction, allows a person using a wheelchair to pull the door open and maneuver into the doorway

ADA 404.2.4.1

Inadequate front approach door strike-edge maneuvering clearance.

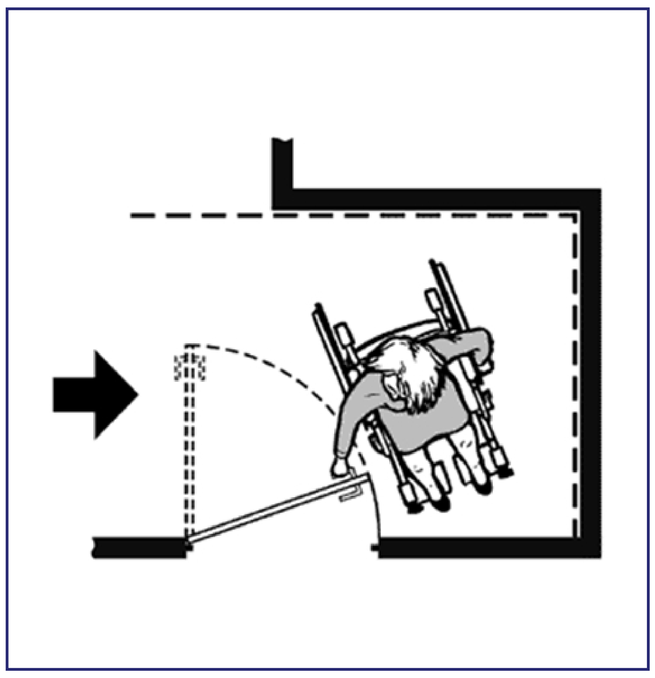

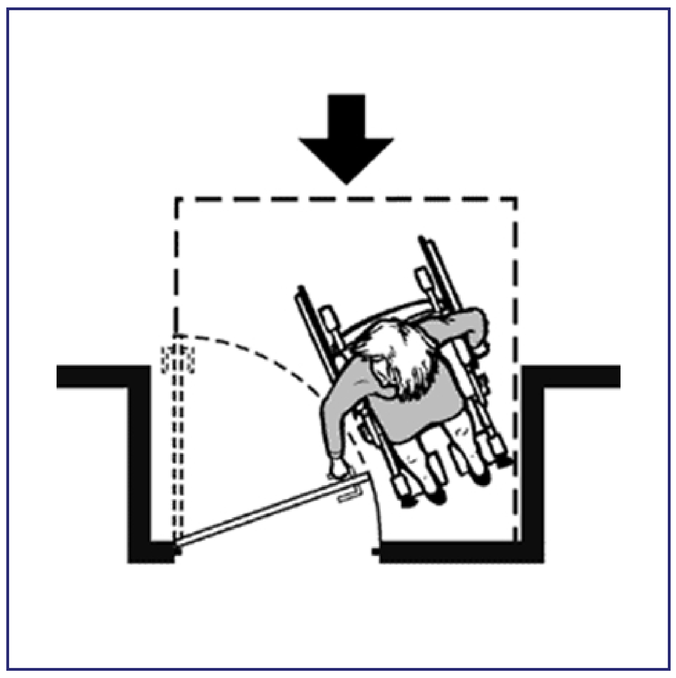

Picture Sources
1- http://www.lostoncampus.com.au
2- www.istockphoto.com

City of Portland

ADA Title II TRANSITION PLAN UPDATE

AMENITIES

Barriers

Design solutions

Drinking fountains

When drinking fountains are provided there needs to be one for a standing person and one that is wheelchair accessible. Standing person fountains have a spout height that is at minimum of 38 inches and 43 inches max. The maximum height for wheelchair accessible spout is 36 inches max. Knee and toe clearance should be provided for a forward approach. ADA 602

No standing fountain provided.

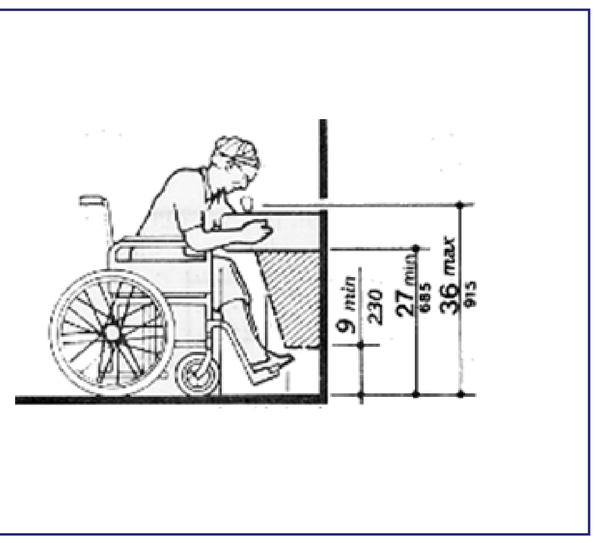

Reach ranges

Items such as light switches, electrical outlets, pamphlet boxes, etc. need to be positioned 15 inches min to 48 inches max above the finished floor for a wheelchair forward approach.

ADA 308.3

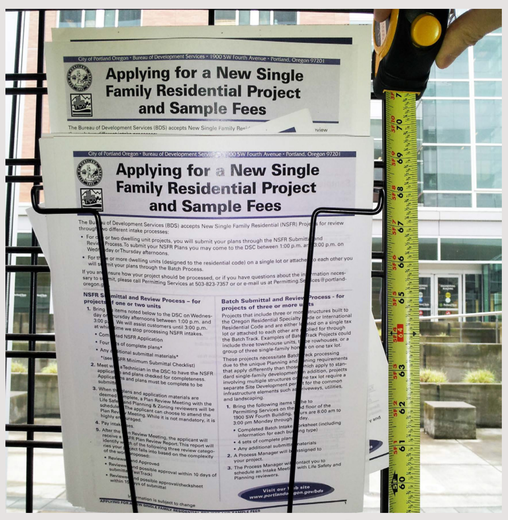

Pamphlet placed at 70 inches above floor.

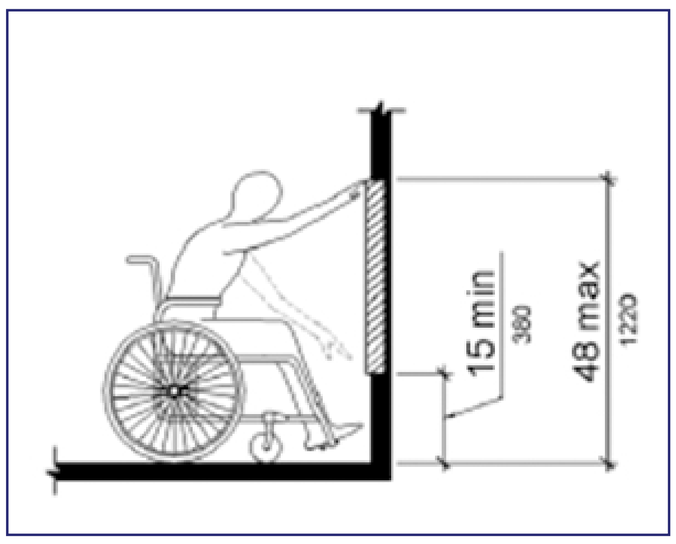

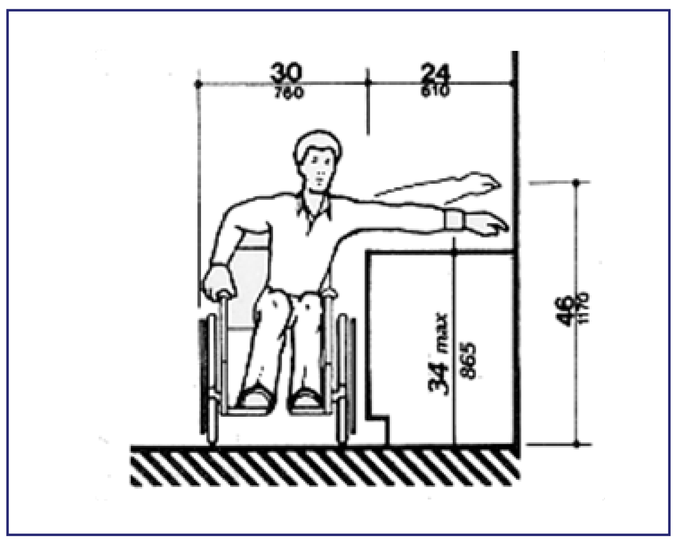

PATHS OF TRAVEL

Change of level

Changes in level along the path of travel should have a maximum total height of ½ inch, with a maximum single vertical rise of ¼ inch.

ADA 303.2 & 303.3

Vertical change of level over 1/4 inch is a barrier.

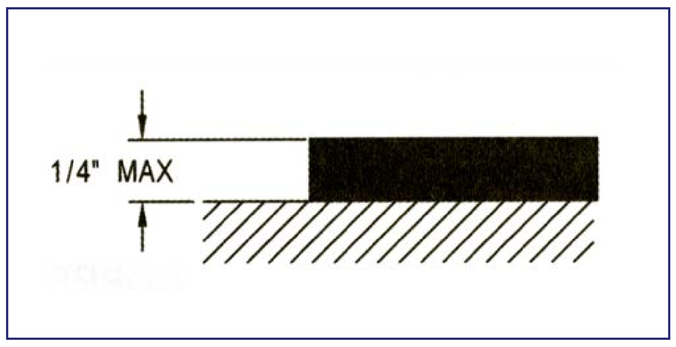

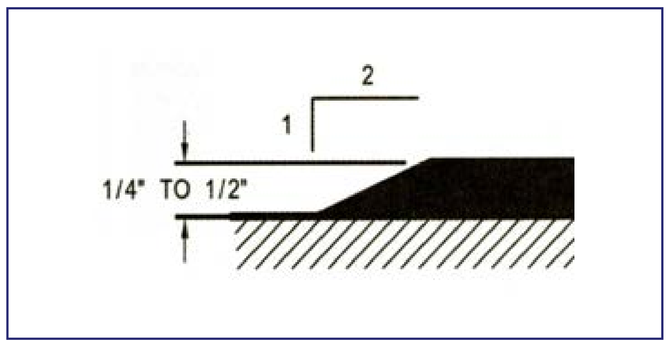

Accessible route

An accessible route is one that that is continuous, without steps and on a surface that is firm and stable. Bumps at the threshold can block small wheels and a slippery floor surface makes traction difficult.

ADA 206.22

Sidewalk condition is not accessible.

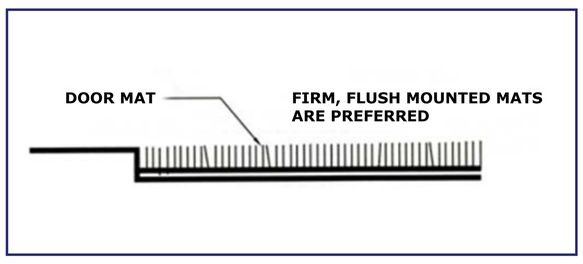

City of Portland

ADA Title II TRANSITION PLAN UPDATE

HAZARDS

Barriers	Design solutions

Loose rugs

Loose carpet interferes with wheelchair, canes and walkers. Carpets and area rugs need to be securely attached to the floor. Carpet pile cannot exceed 1/2 inch thickness and needs to be level cut.

ADA 302.2

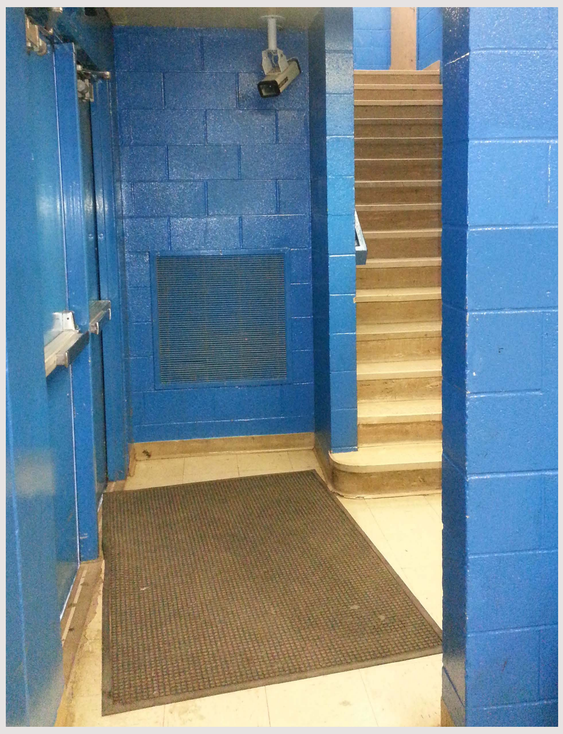

Loose carpet interferes with wheelchairs, canes and walkers.

Protruding & overhanging objects

Protruding objects such as signs and fire extinguishers that protrude from the wall more than 4 inches need to mounted below 27 inches or above 80 inches.
ADA 307.2

Overhanging objects present a hazard to individuals with low-vision. Overhead objects such as signs or tree limbs need to be located at minimum 80 inches above the finished floor.
ADA 307.4

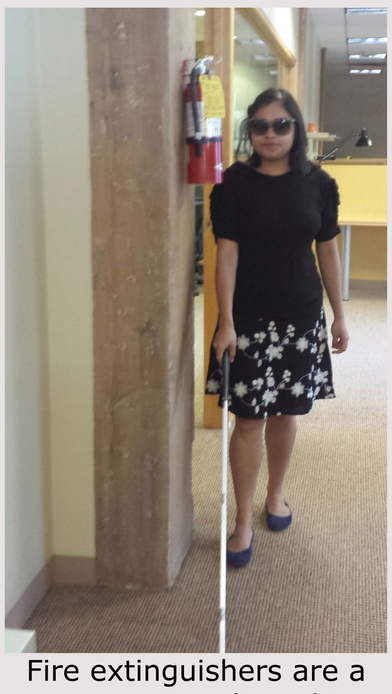

Fire extinguishers are a common protruding object.

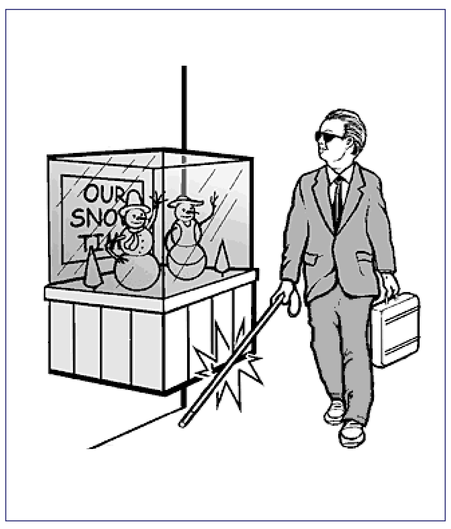

Grates

Grates and vents on walks, floors, ramps or other pedestrian surfaces should have opening smaller than 1/2 inch.

In addition, the grates or vents should be oriented so that the longest dimension is perpendicular to the predominant path of travel.

ADA 302.3

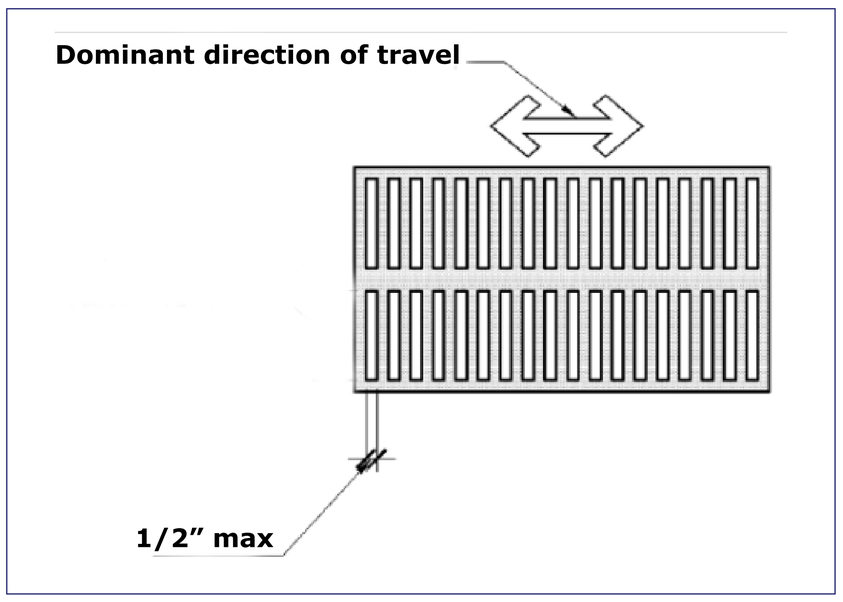

City of Portland

ADA Title II TRANSITION PLAN UPDATE

PARKING

Barriers

Design solutions

Access Aisle

Access aisles for accessible parking spaces must be as long as the parking space they serve.

ADA 502.3.2

Access aisle is obstructed.

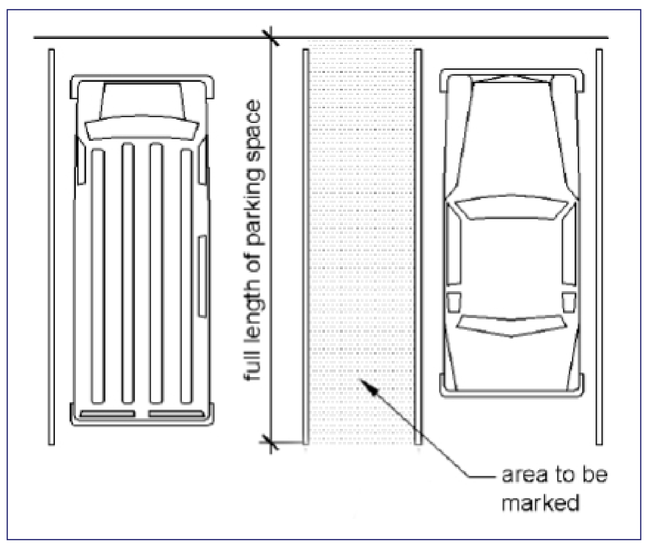

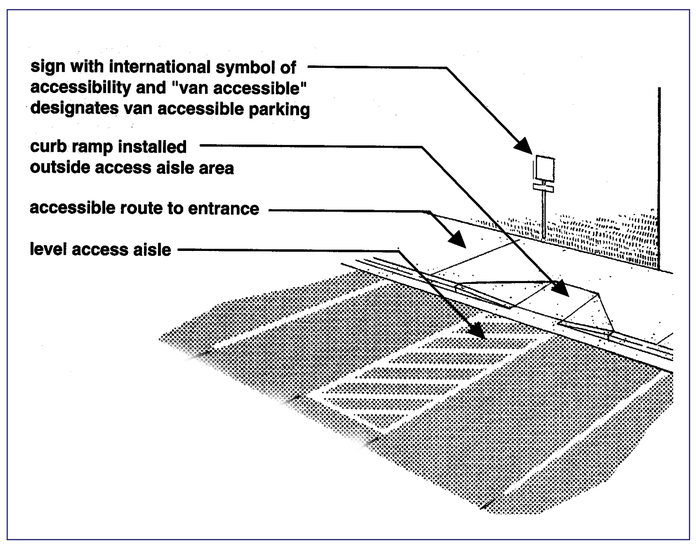

Off-street parking

In Oregon all accessible parking spaces should have a "Reserved Parking" sign 12 inches wide by 18 inches high, with a green retroreflective legend and a white on blue International Symbol of Accessibility and the signs are mounted 60 inches minimum above the ground.

ADA 502.6 | OSSC 1106.7.2

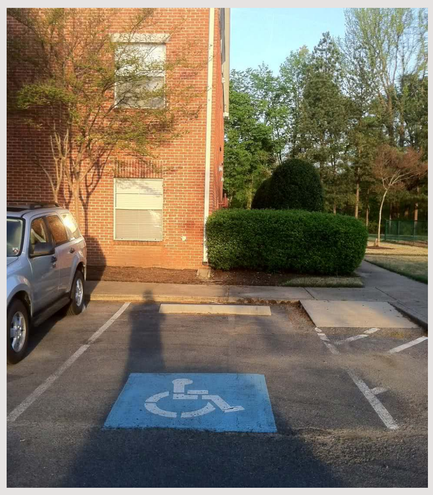

"Reserved Parking" is sign missing.

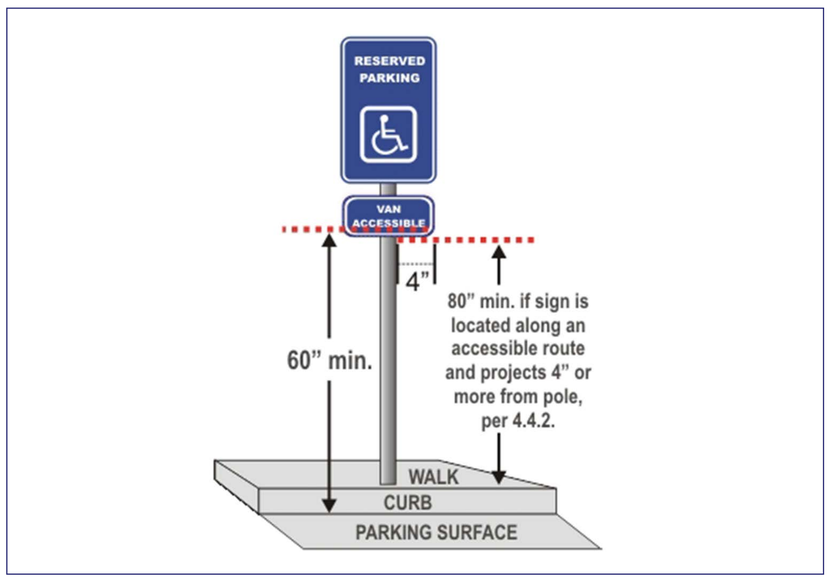

RESTROOMS

Restrooms

The clear space over the water closet is 60 inches min. This allows enough room for an individual to position their wheelchair adjacent to the fixture and transfer onto the commode.

ADA 604.3.1

Inadequate clear space is provided.

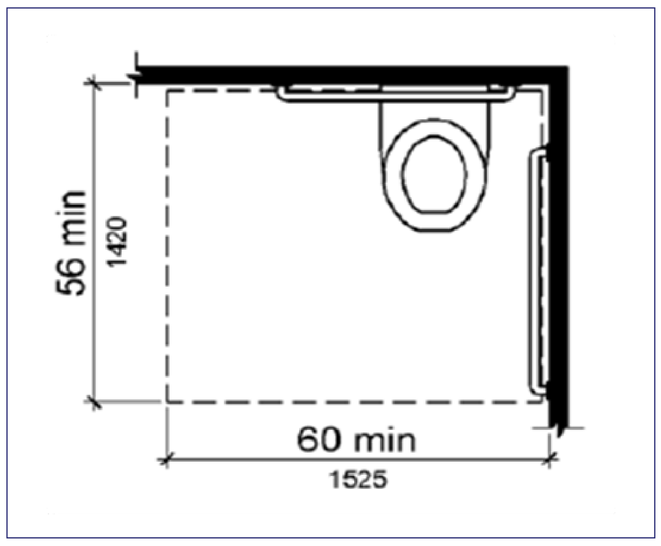

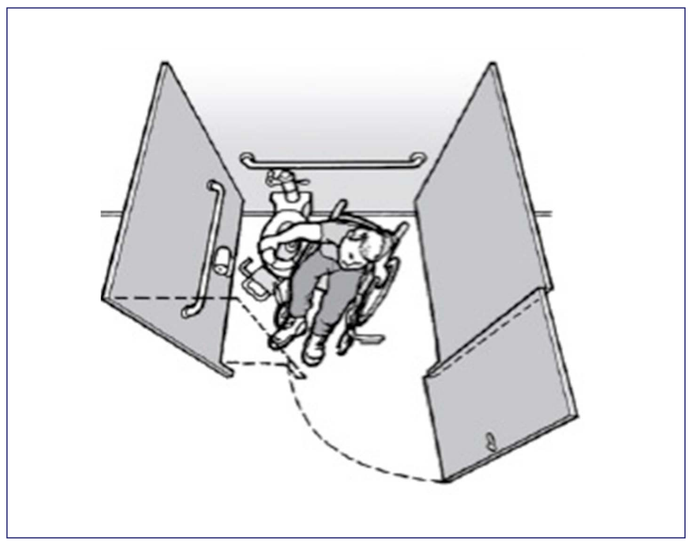

Toilet paper location

The centerline of the toilet paper is 7 inches min to 9 inches max from the front of the water closet and is located 15 inches min to 48 inches max above the finished floor.

ADA 604.7

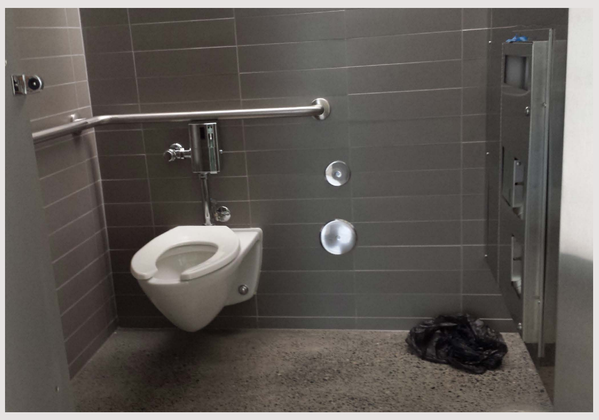

Toilet paper out of reach from the water closet

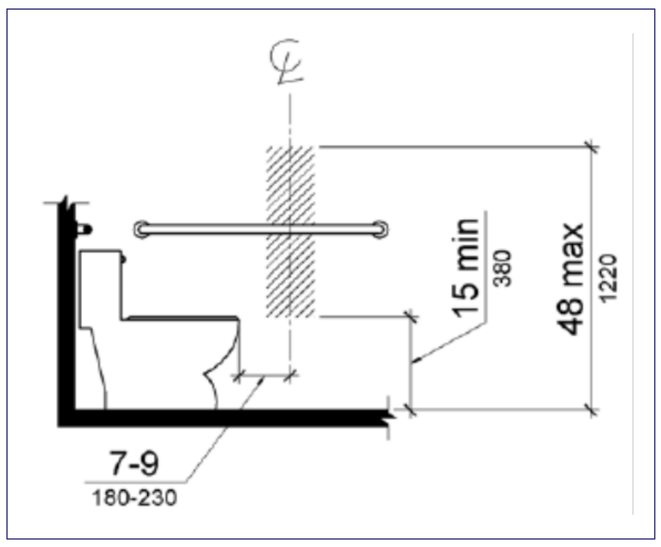

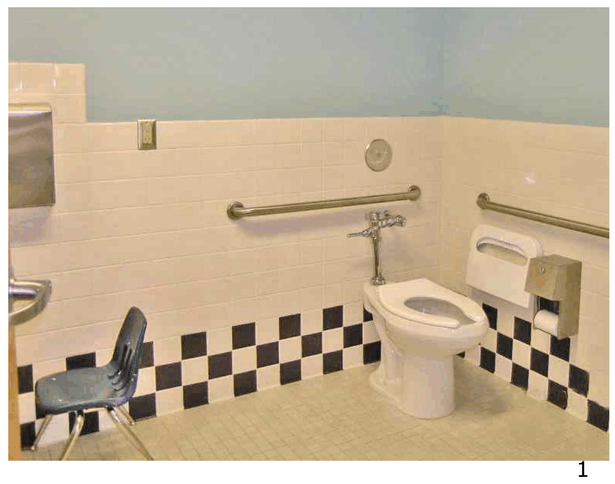

1

Picture Sources
1- http-www.ada.gov-civiccommonprobs-htm

City of Portland

ADA Title II TRANSITION PLAN UPDATE

STAIRS

Barriers	Design solutions

Stair handrails

Stair handrails provide support and safety and should be provided on both sides of the stairway. The top of handrails should be located 34 inches min to 38 inches max above the nosing of the tread and should be positioned at a minimum of 1-1/2 inches from the adjacent wall.

ADA 505

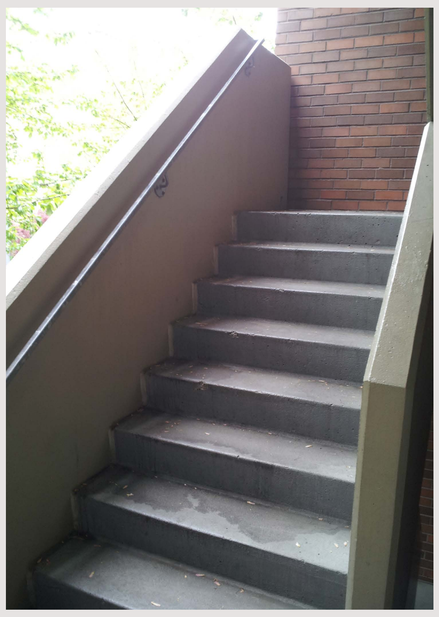

Handrails not provided on both sides.

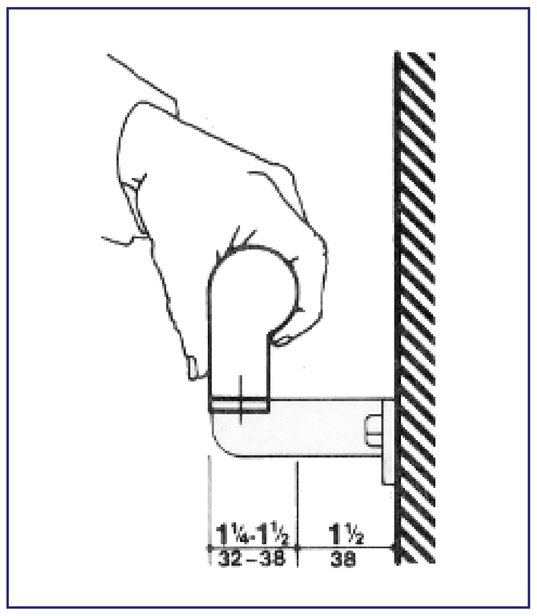

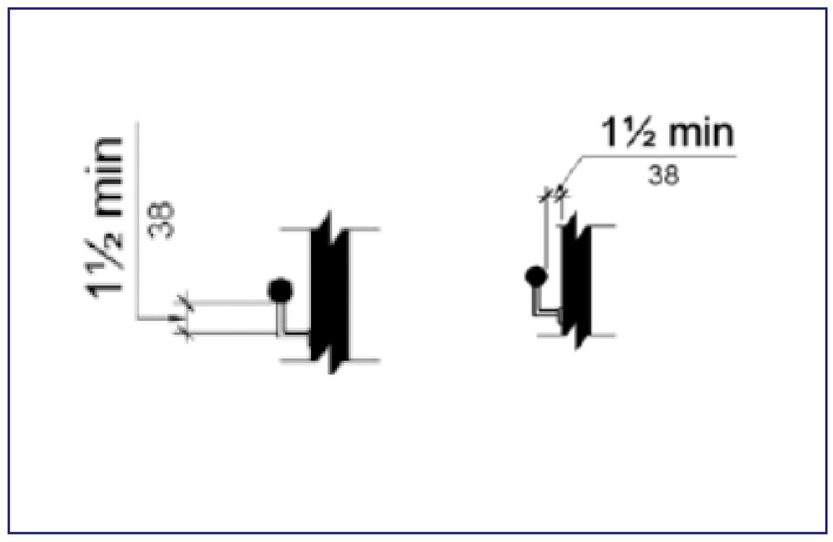

Handrails

All handrails need to return smoothly to the wall, floor or post.

ADA 505

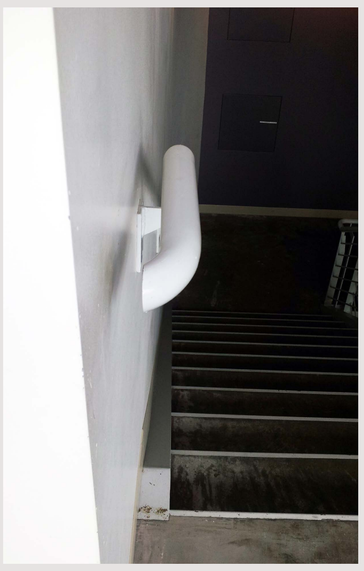

Handrail does not return to wall.

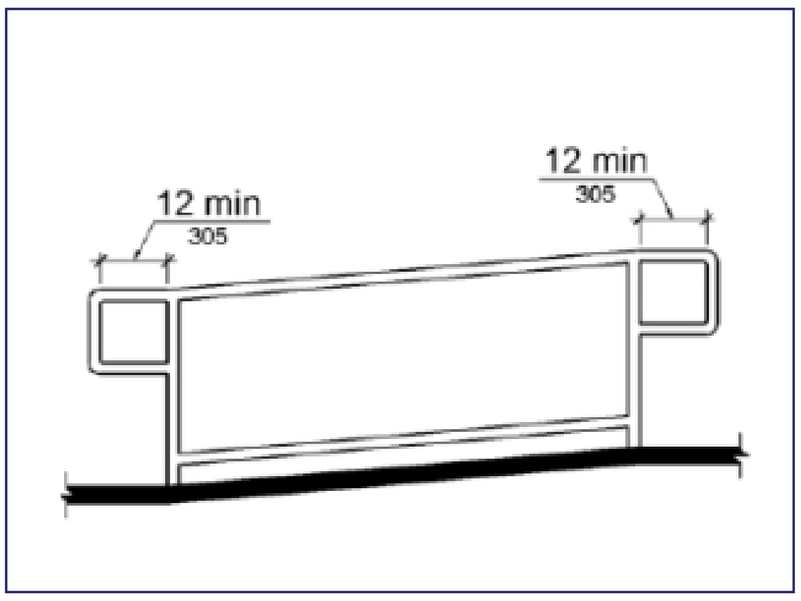

Handrail extensions

The handrails should also have a 12 inch parallel extension parallel to the ground at the top of the stairs and sloping extension, a min of one tread depth (11 inches), at the bottom.

ADA 505

Handrail extensions not provided.

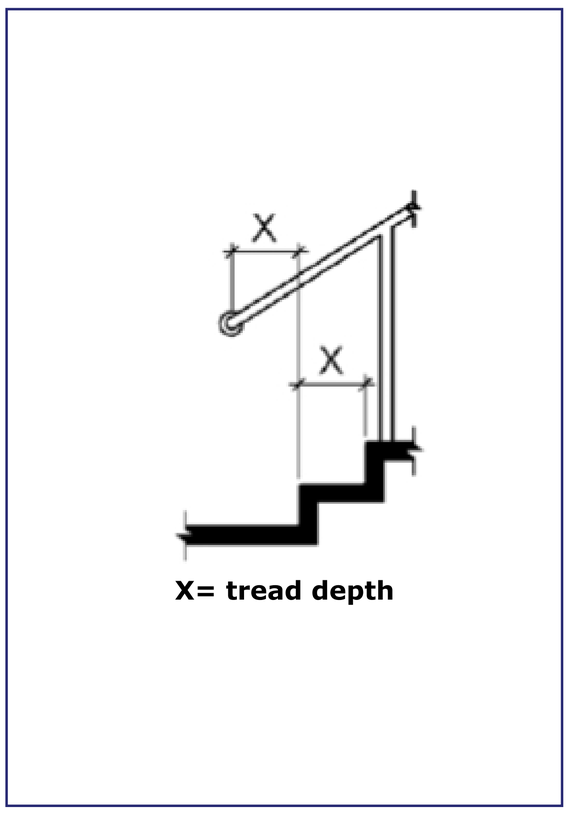

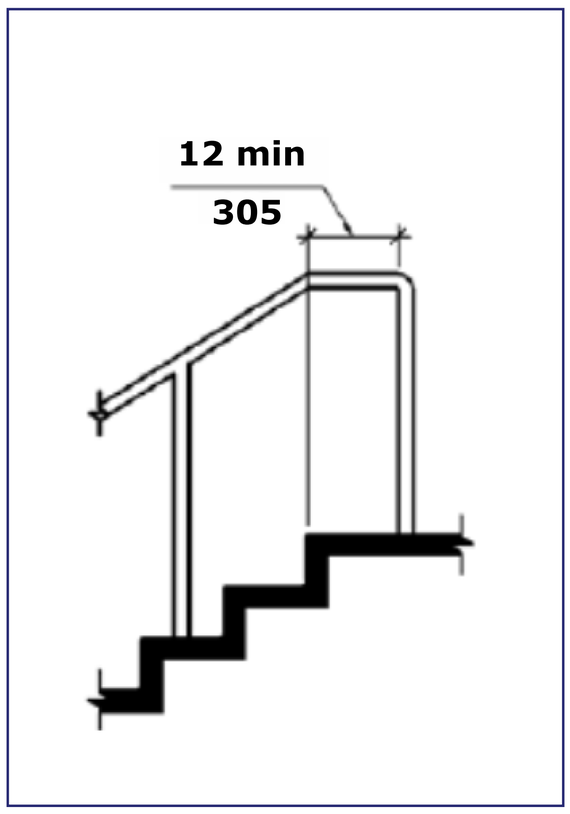

City of Portland

ADA Title II TRANSITION PLAN UPDATE

EVALUATED FACILITIES

BUREAU OF ENVIRONMENTAL SERVICES
- BES-01: Columbia Waste Water Treatment Plant
- BES-03: Water Pollution Control Lab
- BES-06: Swan Island Boat Ramp

OFFICE OF NEIGHBORHOOD INVOLVEMENT
- ONI-01: Historic Kenton Fire House

BUREAU OF TRANSPORTATION
- BOT-01: Kerby Building
- BOT-05: Gumbert Building (formally Valvoline)
- BOT-06: Streetcar Building
- BOT-07: 1st & Jefferson Parking Garage
- BOT-08: 4th & Yamhill Parking Garage
- BOT-09: Naito & Davis Parking Garage
- BOT-10: O'Bryant Square Garage
- BOT-11: 10th & Yamhill Parking Garage
- BOT-12: 3rd & Alder Parking Garage
- BOT-13: 1116 NW 17th Ave

FIRE & RESCUE
- F&R-01: Station 01 - Skidmore
- F&R-02: Station 02 - Parkrose
- F&R-03: Station 03 - Northwest Pearl District
- F&R-04: Station 04 - Portland State University
- F&R-05: Station 05 - Hillsdale
- F&R-06: Station 06 - NW Industrial
- F&R-07: Station 07 - Mill Park
- F&R-08: Station 08 - Kenton
- F&R-09: Station 09 - Hawthorne District
- F&R-11: Station 11 - Lents
- F&R-12: Station 12 - Sandy Blvd.
- F&R-13: Station 13 - Lloyd District
- F&R-14: Station 14 - Alberta Park
- F&R-15: Station 15 - Portland Heights
- F&R-16: Station 16 - Sylvan
- F&R-17: Station 18 - Multnomah Village
- F&R-18: Station 19 - Mt. Tabor
- F&R-19: Station 20 - Sellwood/Moreland
- F&R-21: Station 22 - St. Johns
- F&R-23: Station 24 - Overlook/Swan Island
- F&R-24: Station 25 - Woodstock
- F&R-25: Station 26 - Portsmouth/University Park
- F&R-26: Station 27 - Forest Heights
- F&R-27: Station 28 - Rose City/Hollywood
- F&R-28: Station 29 - Powellhurst Fire Station
- F&R-29: Station 30 - Gateway
- F&R-30: Station 31 - Rockwood
- F&R-31: Belmont Learning Center
- F&R-35: Training Center/Academy
- F&R-36: FMO

OFFICE OF MANAGEMENT & FINANCE
- City -1: Portland Building
- City -2: Columbia Square Building
- City -3: 1900 Building
- City -4: Commonwealth Building
- City -5: City Hall
- OMF-1: Memorial Coliseum (VMC)
- OMF-2:Providenc Park (formerly Jeld-Wen Field)
- OMF-4: Rose Quarter (City-owned)
- OMF-6: Archives & Records Center

POLICE BUREAU
- PB-01: Central Precinct (Justice Center)
- PB-03: East Precinct
- PB-04: Traffic Division and Museum
- PB-05: Property Warehouse Guilds Lake
- PB-06: Rivergate Vehicle Storage
- PB-07: Kelly Building (formerly Traffic Division)
- PB-09: Old Town Precinct
- PB-17: Mounted Patrol Equestrian Facility
- PB-18: 10225 East Burnside

WATER BUREAU
- WB-01: Powell Valley Rd. Facility Bldg.
- WB-05: Willis Building (Greenleaf)
- WB-08: Dodge Park
- WB-10: Bear Creek House 1
- WB-12: Hazelwood Office
- WB-13: Powell Butte Reservoir II Interpretive Center
- WB-14: Groundwater Canoe Launch
- WB-15: Well 29 Canoe Launch
- WB-16: HydroPark -Halsey
- WB-17: HydroPark - Hazelwood
- WB-18: HydroPark - Gilbert
- WB-19: HydroPark - Marigold
- WB-20: HydroPark - Pittman
- WB-21: HydroPark - Texas
- WB-22: HydroPark - Sabin

City of Portland, Oregon
ADA Title II Transition Plan

Facilities

- Administrative Buildings
- Environmental Services
- Office of Management and Finance
- Transportation
- Fire and Rescue
- Police
- Water

Geographic Features

- City Limits (outline)
- Interstate/Highway
- Major Roadway
- Local Street
- City Parks
- River (fill)

Some of the Water Bureau's facilites are located in areas not depicted in this map's extent. The facilities not shown include:

* WB-08 - Dodge Park, 10950 SE Lusted Hill Rd., Sandy
* WB-10 - Bear Creek House 1, 10991 SE Lusted Hill Rd., Sandy
* WB-11 - Bear Creek House 2, 50105 E. Bull Run Rd., Sandy

Park facilities will be addressed during future ADA planning processes.

Portland Facilities by Bureau

Data Sources: City of Portland and RLIS
NAD1983 HARN StatePlane Oregon North
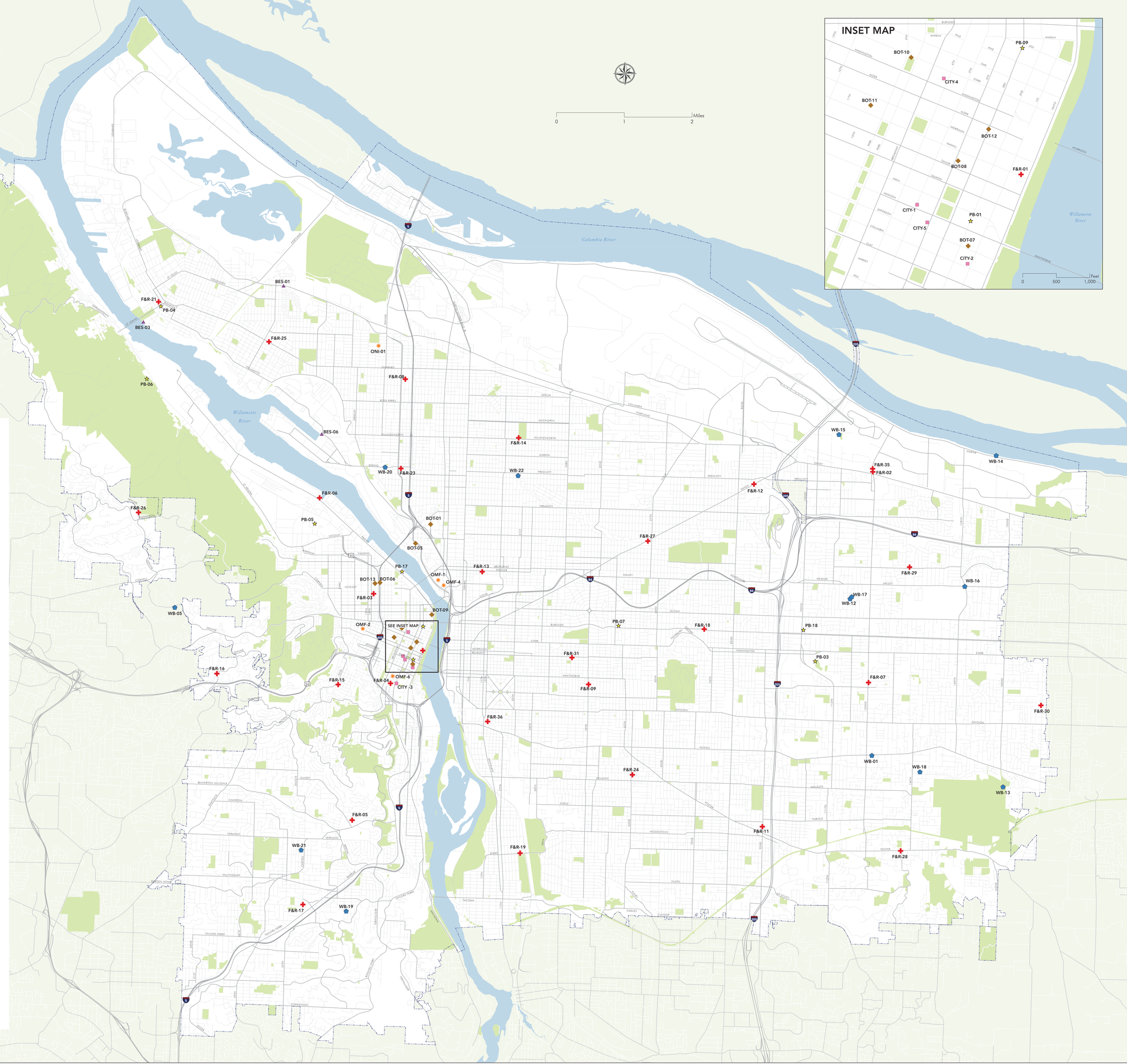
MIG
7.22.2014