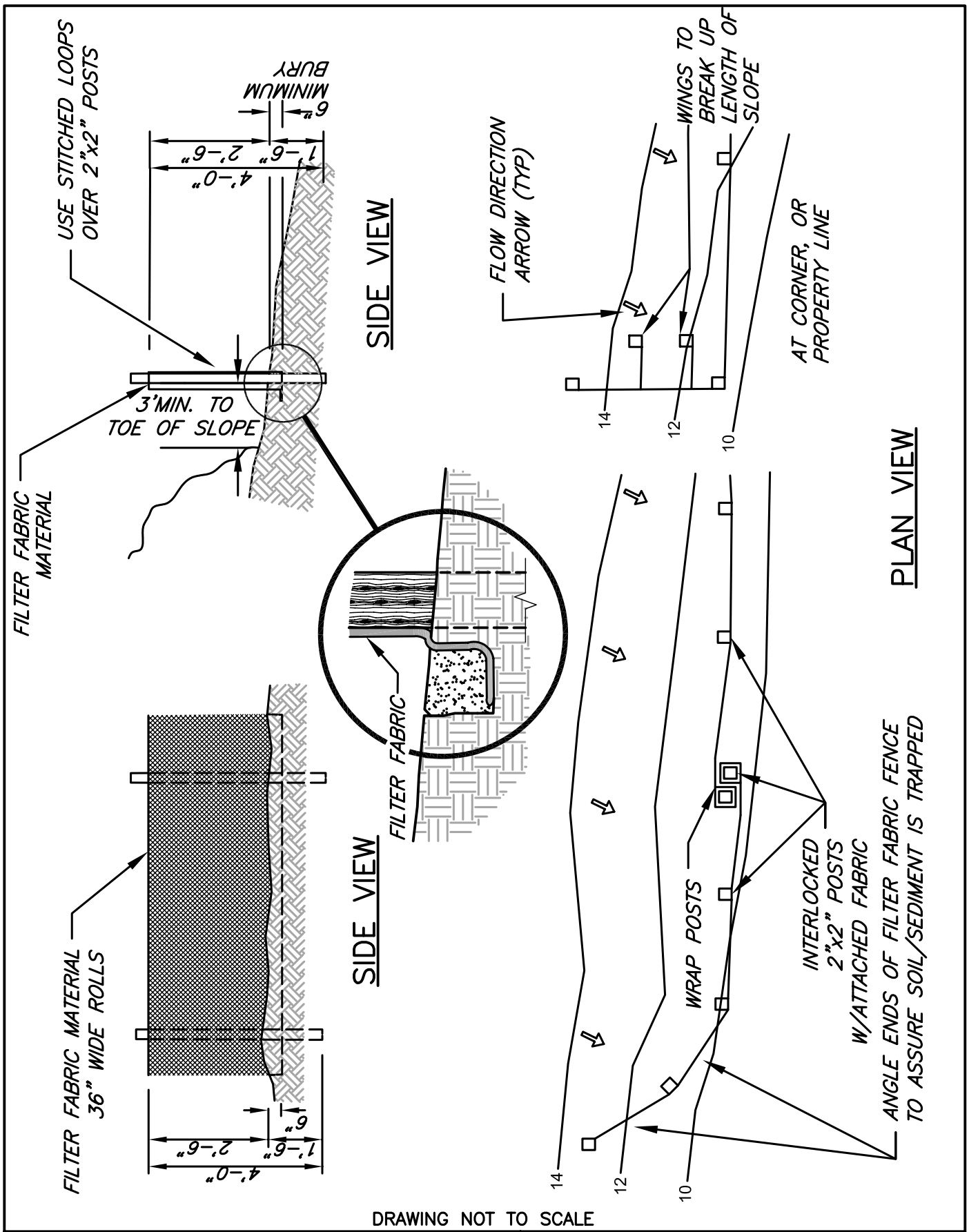

DRAWING NOT TO SCALE

EROSION CONTROL MANUAL	TEMPORARY SEDIMENT FENCE Detail Drawing 4.3–A

FILE DRAFT:INSPECTORS GRAPHICS DRAWING PLOT 1:1